HONDA MARINE

BF25D·BF30D Owner's Manual

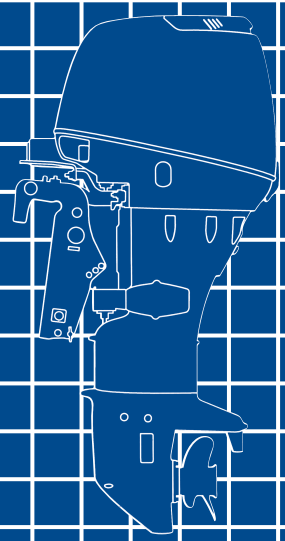

Includes US and Canadian Models

© 2017 Honda Motor Co., Ltd. – All Rights Reserved

⚠ WARNING

The engine exhaust from this product contains chemicals known to the State of California to cause cancer, birth defects, or other reproductive harm.

California Proposition 65

This product contains or emits chemicals known to the state of California to cause cancer, birth defects or other reproductive harm

Keep this Owner's Manual handy, so you can refer to it at any time. This Owner's Manual is considered a permanent part of the outboard motor and should remain with the outboard motor if resold.

The information and specifications included in this publication were in effect at the time of approval for printing. Honda Motor Co., Ltd. reserves the right, however, to discontinue or change specifications or design at any time without notice and without incurring any obligation whatsoever. No part of this publication may be reproduced without written permission.

INTRODUCTION

Congratulations on your selection of a Honda outboard motor. We are certain you will be pleased with your purchase of one of the finest outboard motors on the market.

We want to help you get the best results from your new outboard motor and to operate it safely. This manual contains information on how to do that; please read it carefully.

As you read this manual you will find information preceded by a NOTICE symbol. That information is intended to help you avoid damage to your outboard motor, other property, or the environment.

We suggest you read the warranty policy to fully understand its coverage and your responsibilities of ownership.

When your outboard motor needs scheduled maintenance, keep in mind that your Honda Marine dealer is specially trained in servicing Honda outboard motors. Your Honda Marine dealer is dedicated to your satisfaction and will be pleased to answer your questions and concerns.

Best Wishes,
Honda Motor Co., Ltd.

A FEW WORDS ABOUT SAFETY

Your safety and the safety of others are very important. And using this outboard motor safely is an important responsibility.

To help you make informed decisions about safety, we have provided operating procedures and other information on labels and in this manual. This information alerts you to potential hazards that could hurt you or others.

Of course, it is not practical or possible to warn you about all the hazards associated with operating or maintaining an outboard motor. You must use your own good judgment.

You will find important safety information in a variety of forms, including:

- **Safety Labels** – on the outboard motor.
- **Safety Messages** – preceded by a safety alert symbol ⚠ and one of three signal words, DANGER, WARNING, or CAUTION.

  These signal words mean:

⚠ DANGER	You WILL be KILLED or SERIOUSLY HURT if you don't follow instructions.
⚠ WARNING	You CAN be KILLED or SERIOUSLY HURT if you don't follow instructions.
⚠ CAUTION	You CAN be HURT if you don't follow instructions.

- **Safety Headings** – such as *IMPORTANT SAFETY INFORMATION.*
- **Safety Section** – such as *OUTBOARD MOTOR SAFETY.*
- **Instructions** – how to use this outboard motor correctly and safely.

This entire book is filled with important safety information – please read it carefully.

CONTENTS

OUTBOARD MOTOR SAFETY 7
IMPORTANT SAFETY INFORMATION 7
SAFETY LABEL LOCATIONS 9

CONTROLS AND FEATURES 13
CONTROL AND FEATURE IDENTIFICATION CODES 13
COMPONENT AND CONTROL LOCATIONS ... 14
CONTROLS 19
SHG and LHG Types (long tiller handle)
Ignition Switch 19
Emergency Stop Switch Clip and Emergency Stop Switch 20
Throttle Grip 20
Throttle Friction Adjuster 21
Gearshift Lever 21
Steering Friction Adjuster 21
Tilt Lever (SHG, LRG and LHG types) 22
LRG, SRT and LRT Types
[standard equipment (LRTC type)], [optional equipment (LRGA, SRTA and LRTA types)] 23
Ignition Switch 23
Emergency Stop Switch Clip and Emergency Stop Switch 23
Fast Idle Lever 24
Gearshift/Throttle Control Lever 25
Power Trim/Tilt Switch
[standard equipment (LRTC type)], [optional equipment (SRTA and LRTA types)] 26
Power Tilt Switch (SRT and LRT types) 26
Manual Relief Valve (SRT and LRT types) 27
Common Controls 27
Tilt Lock Lever 27
Engine Cover Latches 27
Transom Angle Adjusting Rod 28
Trim Tab 28
INSTRUMENTS 29
Trim Meter [standard equipment (LRTC type)], [optional equipment (SRTA and LRTA types)] 29
Tachometer [standard equipment (LRTC type)], [optional equipment (other types)] 29
Fuel Gauge
[standard equipment (Canadian types)], [optional equipment (American types)] 29
INDICATORS 30
Oil Pressure Indicator 30
Overheat Indicator 31
Cooling System Indicator 31

CONTENTS

OTHER FEATURES 32
Anodes 32
Overrev Limiter 33
Portable Fuel Tank
[standard equipment (Canadian types)],
[optional equipment (American types)] 33
Fuel Filler Cap Vent Knob 33
Fuel Priming Bulb 34

INSTALLATION 35
POWER REQUIREMENTS 35
BOAT TRANSOM REQUIREMENTS 35
INSTALLATION POSITION 35
ATTACHMENT 36
TRANSOM ANGLE ADJUSTMENT 37
ELECTRICAL CONNECTIONS 38

BEFORE OPERATION 40
ARE YOU READY TO GET UNDERWAY? 40
IS YOUR OUTBOARD MOTOR
READY TO GO? 40

OPERATION 42
SAFE OPERATING PRECAUTIONS 42
BREAK-IN PROCEDURE 42

TRANSOM ANGLE ADJUSTMENT 43
PORTABLE FUEL TANK
[standard equipment (Canadian types)],
[optional equipment (American types)] 44
FUEL HOSE CONNECTIONS 45
FUEL PRIMING 46
INFREQUENT OR OCCASIONAL USE 46
STARTING THE ENGINE 46
SHG and LHG Types (long tiller handle) 46
LRG, SRT and LRT Types (remote control) 49
EMERGENCY STARTING 51
STOPPING THE ENGINE 54
Emergency Engine Stopping 54
Normal Engine Stopping 54
GEARSHIFT AND
THROTTLE OPERATION 56
SHG and LHG Types (long tiller handle) 56
LRG, SRT and LRT Types
[remote control (side-mount type)] 57
STEERING 58
SHG and LHG Types (long tiller handle) 58
Steering Friction Adjuster 58
LRG, SRT and LRT Types (remote control) 58
CRUISING 59
TRIM TAB 61
SHALLOW WATER OPERATION 61
MOORING, BEACHING, LAUNCHING 63

CONTENTS

SERVICING YOUR OUTBOARD MOTOR 65
THE IMPORTANCE OF MAINTENANCE 65
MAINTENANCE SAFETY 66
SPARE SWITCH CLIP AND EMERGENCY STARTER ROPE 67
TOOL KIT 67
MAINTENANCE SCHEDULE 68
TRIM TAB ADJUSTMENT 70
MANUAL RELIEF VALVE 71
ENGINE COVER REMOVAL AND INSTALLATION 71
Engine Oil Level Check 72
Engine Oil Change 73
Engine Oil Recommendations 75
Lubrication Points 76
Spark Plug Service 77
REFUELING 79
FUEL RECOMMENDATIONS 81
Fuel Filter Inspection and Replacement 82
Portable Fuel Tank and Tank Filter Cleaning [standard equipment (Canadian types)], [optional equipment (American types)] 84
Anode Replacement 85
Propeller Replacement 86
CLEANING AND FLUSHING 88
Cleaning and Flushing 88
STORAGE 91
Fuel 91
Engine Oil 93
STORAGE PRECAUTIONS 93
REMOVAL FROM STORAGE 94
TRANSPORTING 95
WITH OUTBOARD MOTOR INSTALLED ON BOAT 95
WITH OUTBOARD MOTOR REMOVED FROM BOAT 96

CONTENTS

TAKING CARE OF UNEXPECTED PROBLEMS 98
ELECTRIC STARTER WILL NOT OPERATE 98
ENGINE WILL NOT START 99
HARD STARTING OR STALLS AFTER STARTING 101
ENGINE OVERHEATS 102
BATTERY WILL NOT CHARGE AND ELECTRIC STARTER WILL NOT OPERATE 103
Fuse Replacement 103
OIL PRESSURE INDICATOR GOES OFF AND ENGINE SPEED IS LIMITED 104
OVERHEAT INDICATOR COMES ON AND ENGINE SPEED IS LIMITED 105
SUBMERGED OUTBOARD MOTOR 106

TECHNICAL INFORMATION 108
Serial Number Locations 108
Carburetor Modification for High Altitude Operation 109
Battery 109
Emission Control System Information 110
Star Label 112
Specifications 114

CONSUMER INFORMATION 118
Dealer Locator Information 118
Honda Publications 118
Customer Service Information 119
Warranty Statements 121
Distributor's Limited Warranty 121
Emission Control System Warranty 126
Distributor's Warranty 131

INDEX 134

IMPORTANT SAFETY INFORMATION

The Honda BF25D and BF30D outboard motors are designed for use with boats that have a suitable manufacturer's power recommendation. Other uses can result in injury to the operator or damage to the outboard motor and other property.

Most injuries or property damage can be prevented if you follow all instructions in this manual and on the outboard motor. The most common hazards are discussed in this chapter, along with the best way to protect yourself and others.

Operator Responsibility

- It is the operator's responsibility to provide the necessary safeguards to protect people and property. Know how to stop the engine quickly in case of emergency. Understand the use of all controls.
- Stop the engine immediately if anyone falls overboard, and do not run the engine while the boat is near anyone in the water.
- Always stop the engine if you must leave the controls for any reason.
- Attach the emergency stop switch lanyard securely to the operator.
- Always wear a PFD (Personal Flotation Device) while on the boat.
- Familiarize yourself with all laws and regulations relating to boating and the use of outboard motors.
- Be sure that anyone who operates the outboard motor receives proper instruction.
- Be sure the outboard motor is properly mounted on the boat.
- Do not remove the engine cover while the engine is running.

Refuel With Care

- Gasoline is extremely flammable, and gasoline vapor can explode. Refuel outdoors, in a well-ventilated area, with the engine stopped. Never smoke near gasoline, and keep other flames and sparks away.
- Remove any portable fuel tank from the boat for refueling. Keep the portable fuel tank away from the battery or other potential spark sources.
- Refuel carefully to avoid spilling fuel. Avoid overfilling the fuel tank.
- After refueling, tighten the filler cap securely. If any fuel is spilled, make sure the area is dry before starting the engine.

Carbon Monoxide Hazard

Exhaust contains poisonous carbon monoxide, a colorless, odorless gas. Breathing carbon monoxide can cause loss of consciousness and may lead to death.

If you run the engine in an area that is confined, or even partly enclosed, the air you breathe could contain a dangerous amount of exhaust gas.

Never run your outboard inside a garage or other enclosure.

SAFETY LABEL LOCATIONS
US, Puerto Rico, and US Virgin Islands Types

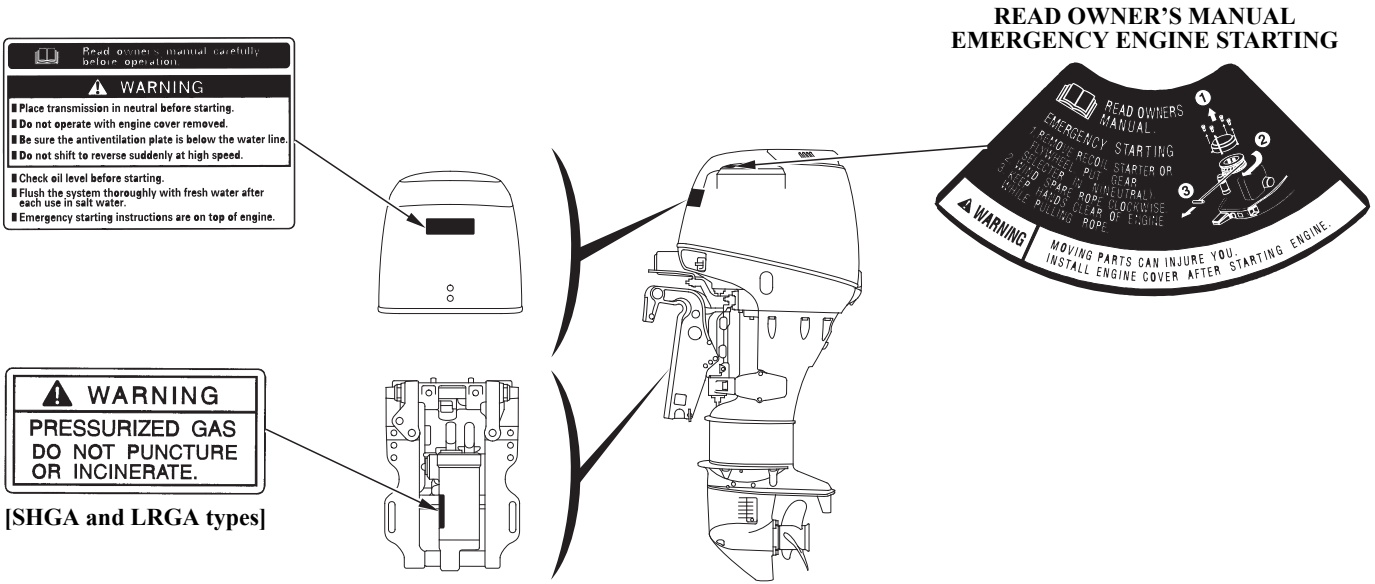

READ OWNER'S MANUAL
EMERGENCY ENGINE STARTING

[SHGA and LRGA types]

The labels shown here contain important safety information. Please read them carefully. These labels are considered permanent parts of your outboard motor. If a label comes off or becomes hard to read, contact an authorized Honda Marine dealer for a replacement.

Canadian Types

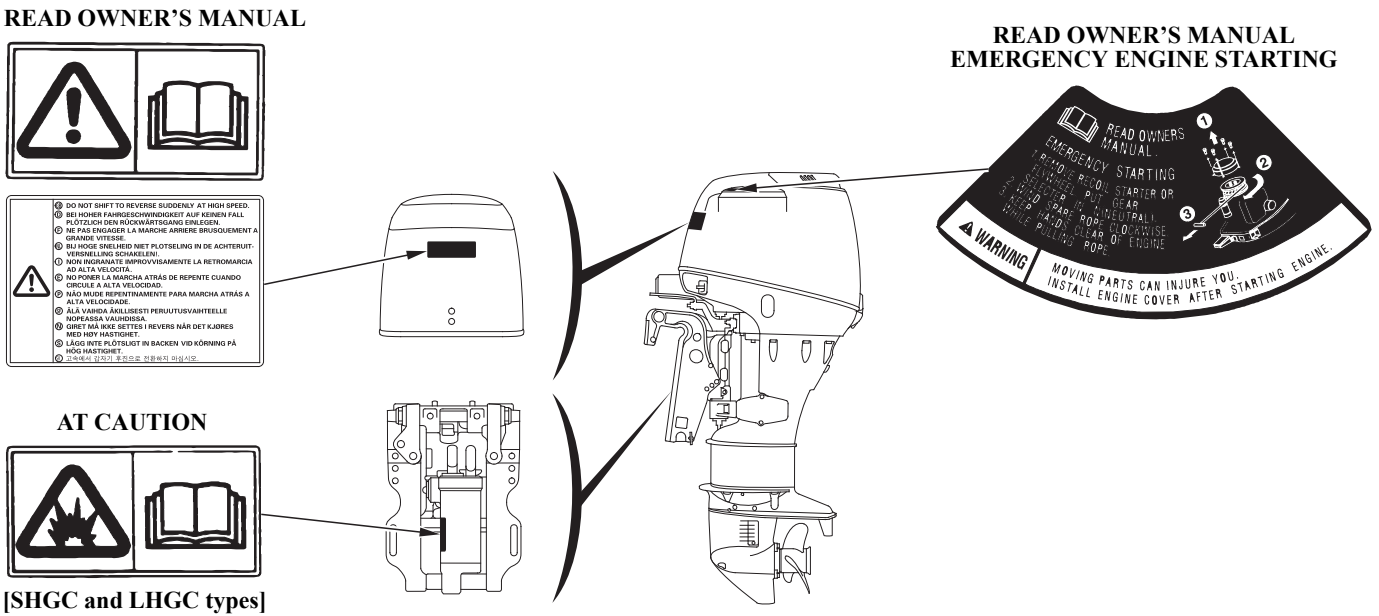

These labels and indications warn you of potential hazards that can cause serious injury.
Read the labels, indications and safety notes and precautions described in this manual carefully.
If a label comes off or becomes hard to read, contact your Honda outboard motor dealer for a replacement.

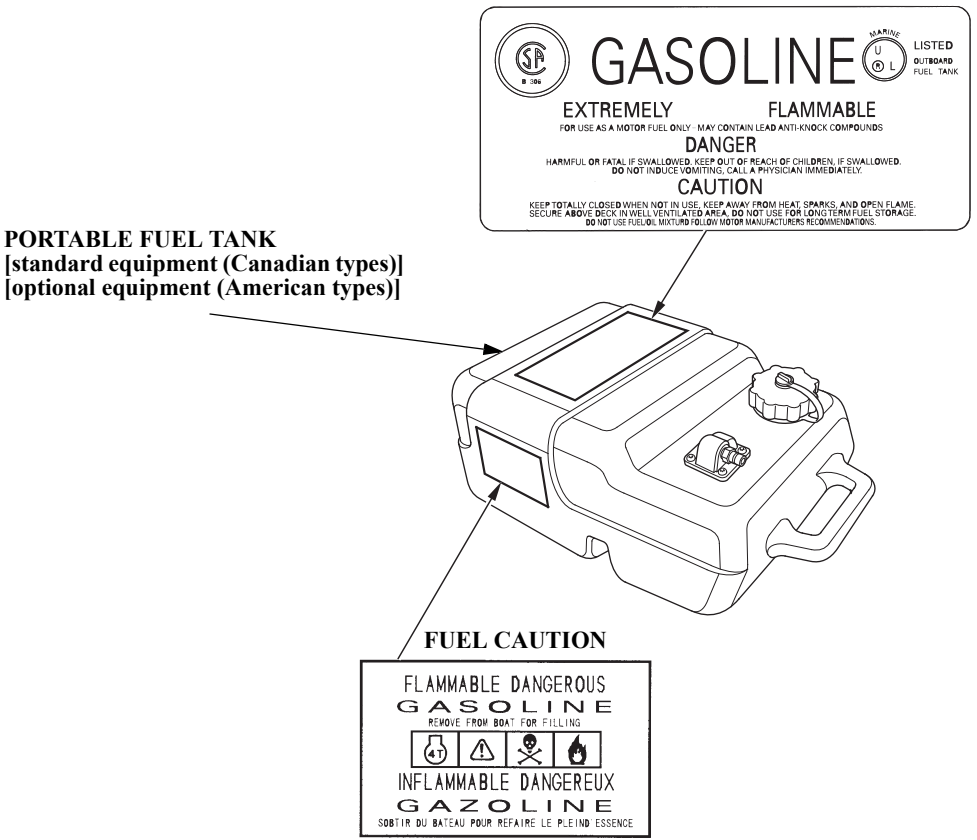
GASOLINE
MARINE
LISTED
OUTBOARD
FUEL TANK
EXTREMELY FLAMMABLE
FOR USE AS A MOTOR FUEL ONLY - MAY CONTAIN LEAD ANTI-KNOCK COMPOUNDS
DANGER
HARMFUL OR FATAL IF SWALLOWED. KEEP OUT OF REACH OF CHILDREN. IF SWALLOWED, DO NOT INDUCE VOMITING, CALL A PHYSICIAN IMMEDIATELY.
CAUTION
KEEP TOTALLY CLOSED WHEN NOT IN USE. KEEP AWAY FROM HEAT, SPARKS, AND OPEN FLAME. SECURE ABOVE DECK IN WELL VENTILATED AREA. DO NOT USE FOR LONGTERM FUEL STORAGE. DO NOT USE FUEL/OIL MIXTURE FOLLOW MOTOR MANUFACTURERS RECOMMENDATIONS.
PORTABLE FUEL TANK
[standard equipment (Canadian types)]
[optional equipment (American types)]
FUEL CAUTION
FLAMMABLE DANGEROUS
GASOLINE
REMOVE FROM BOAT FOR FILLING
4T
INFLAMMABLE DANGEREUX
GAZOLINE
SORTIR DU BATEAU POUR REFAIRE LE PLEIND ESSENCE

Canadian Types

- **Honda outboard motor is designed to give safe and dependable service if operated according to instructions.**
  Read and understand the Owner's Manual before operating the outboard motor. Failure to do so could result in personal injury or equipment damage.

- **Gasoline is harmful or fatal if swallowed. Keep the fuel tank out of reach of children.**
- **Gasoline is extremely flammable and is explosive under certain conditions. Refuel in a well-ventilated area with the engine stopped.**
- **Do not smoke or allow flames or sparks where the engine is refueled or where gasoline is stored.**
- **Do not overfill the fuel tank. After refueling make sure that the fuel filler cap is closed properly and securely.**
- **Be careful not to spill any fuel while refueling. Spilled fuel or fuel vapor may ignite. If any fuel is spilled, make sure that the area is dry before starting the engine.**

CONTROL AND FEATURE IDENTIFICATION CODES

Model		BF25D					BF30D			
Type		SHGA	SHGC	LRGA	LHGC	LRTA	SRTA	LRGA	LRTA	LRTC
Shaft Length	S	•	•				•			
	L			•	•	•		•	•	•
Long Tiller Handle		•	•		•					
Remote Control				•		•	•	•	•	•
Electric Starter		•	•	•	•	•	•	•	•	•
Gas Assist Tilt		•	•	•	•			•		
Power Trim/Tilt						•	•		•	•
Tachometer		*	*	*	*	*	*	*	*	•
Trim Meter						*	*		*	•

*: Optional equipment

Refer to this chart for an explanation of the Type Codes used in this manual to identify control and feature applications.

TYPE CODE (Example)

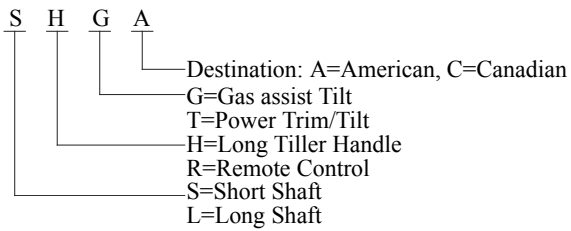

COMPONENT AND CONTROL LOCATIONS
SHG and LHG Types (long tiller handle)

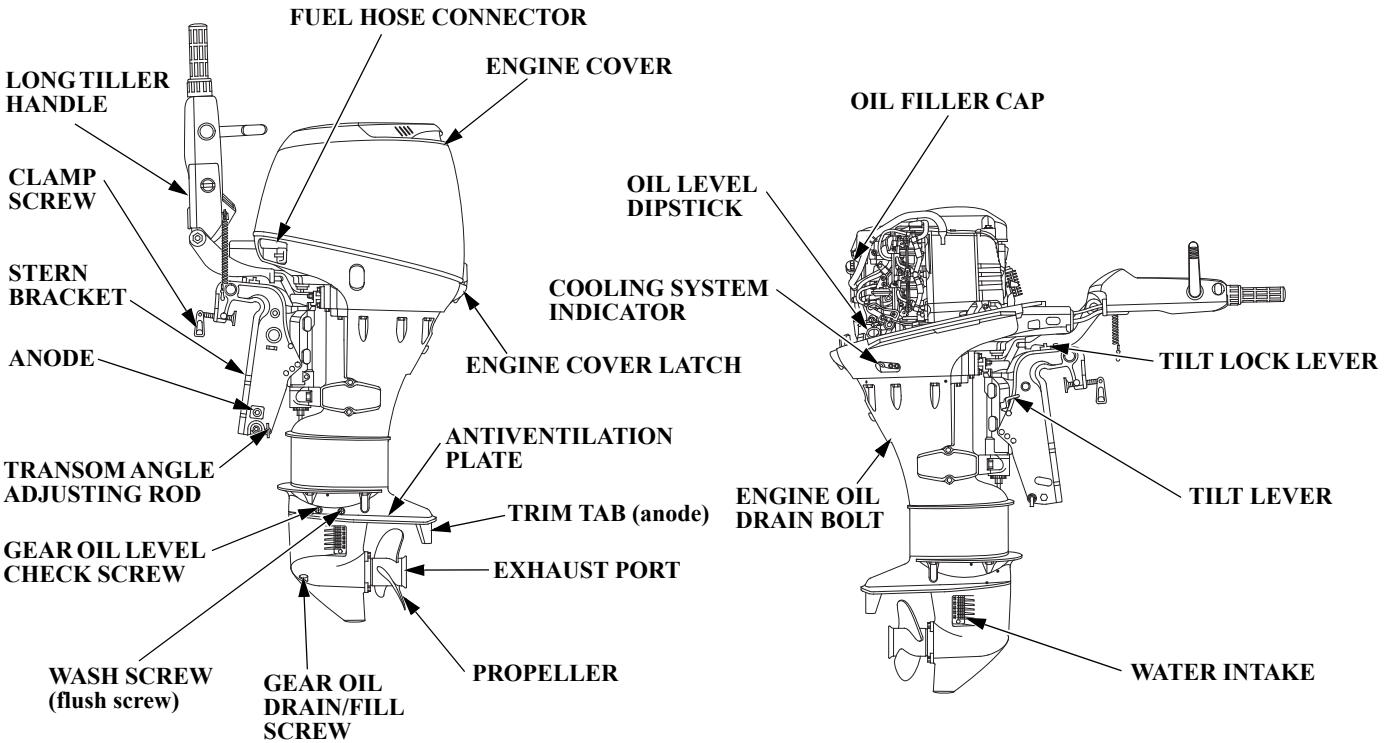

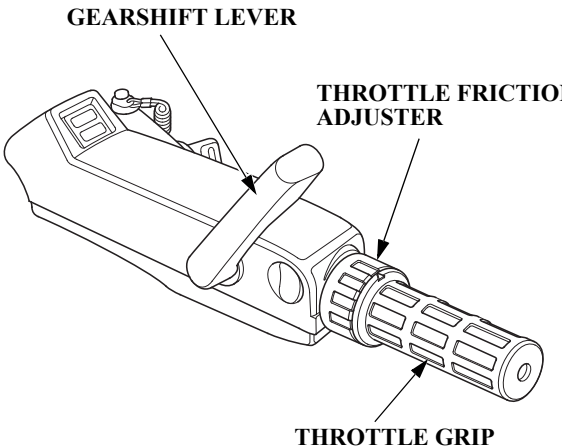
GEARSHIFT LEVER
THROTTLE FRICTION ADJUSTER
THROTTLE GRIP

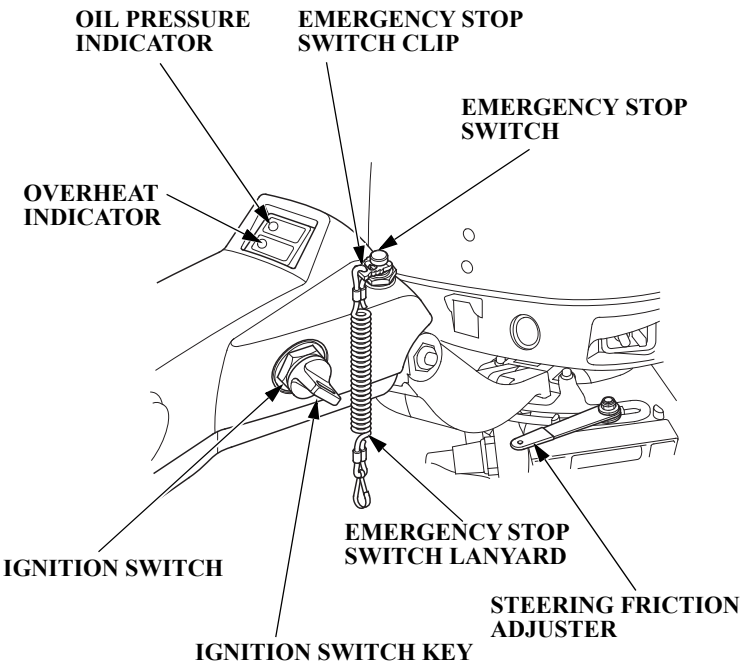
OIL PRESSURE INDICATOR
EMERGENCY STOP SWITCH CLIP
EMERGENCY STOP SWITCH
OVERHEAT INDICATOR
IGNITION SWITCH
EMERGENCY STOP SWITCH LANYARD
STEERING FRICTION ADJUSTER
IGNITION SWITCH KEY

LRG, SRT and LRT Types (remote control)

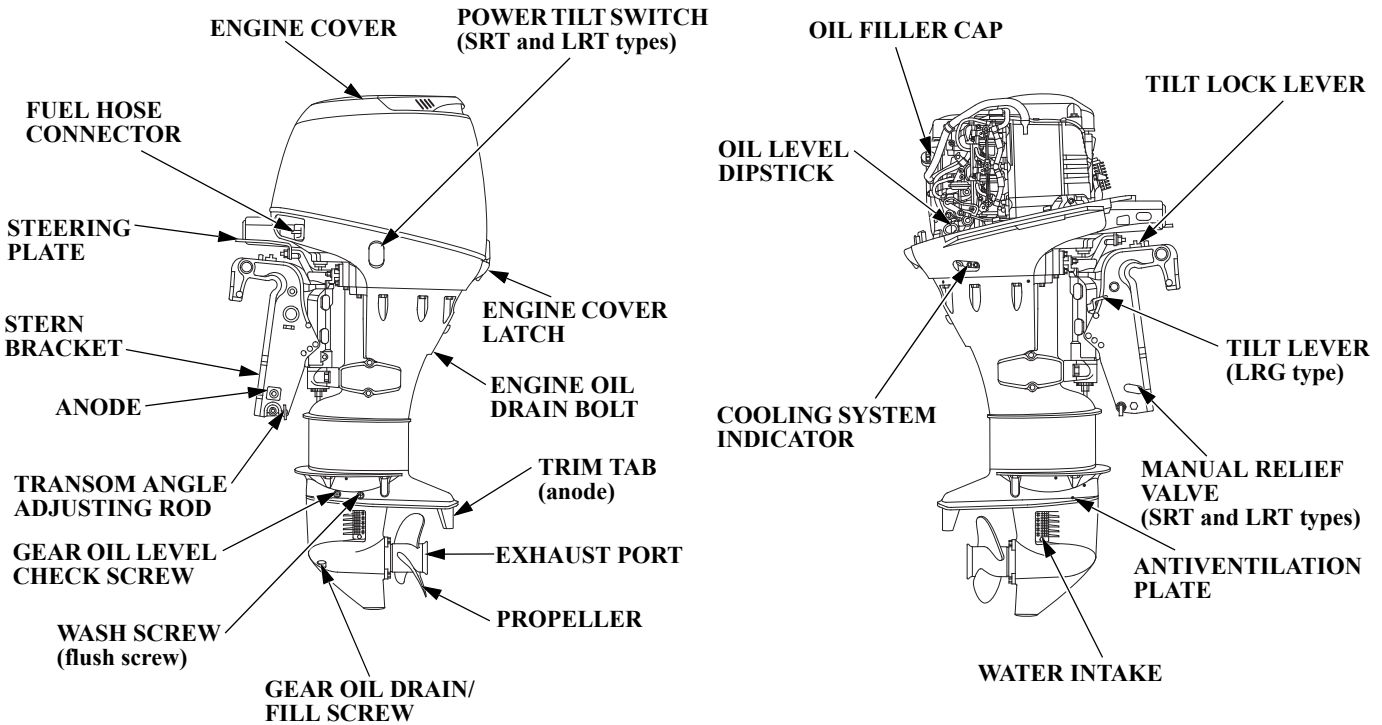

Remote Control box (side-mount type)
[standard equipment (LRTC type)]
[optional equipment (LRGA, SRTA and LRTA types)]

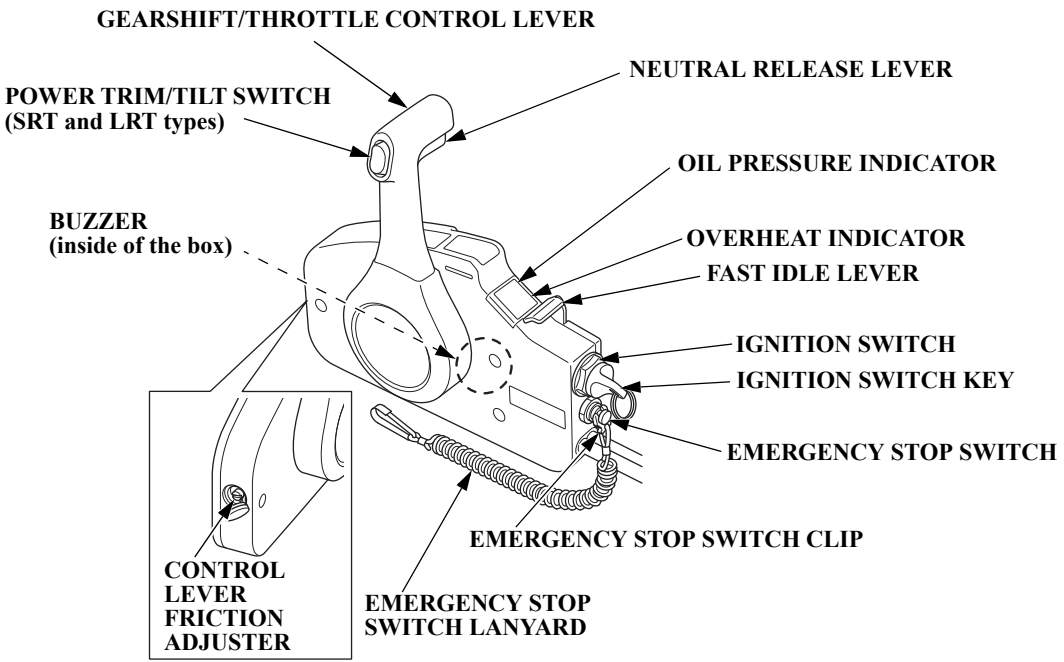

Portable Fuel Tank
[standard equipment (Canadian types)]
[optional equipment (American types)]

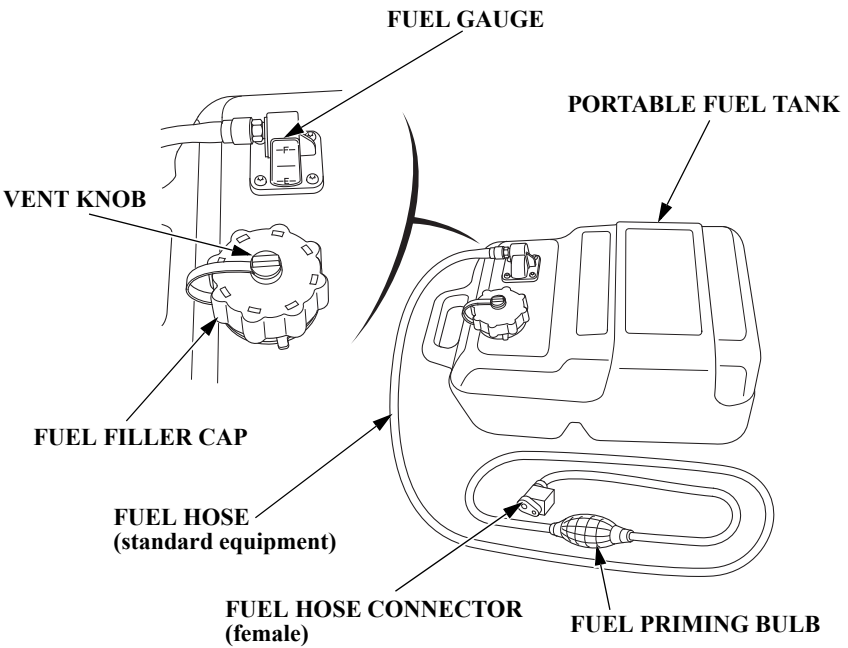

Tachometer
[standard equipment (LRTC type)]
[optional equipment (other types)]

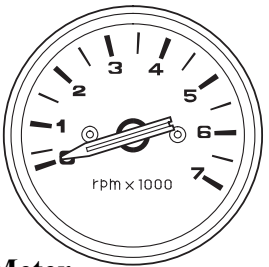

Trim Meter
[standard equipment (LRTC type)]
[optional equipment (SRTA and LRTA types)]

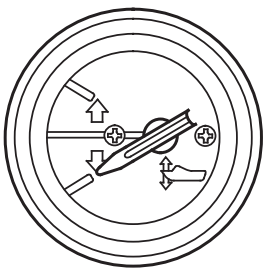

CONTROLS
SHG and LHG Types (long tiller handle)

Ignition Switch

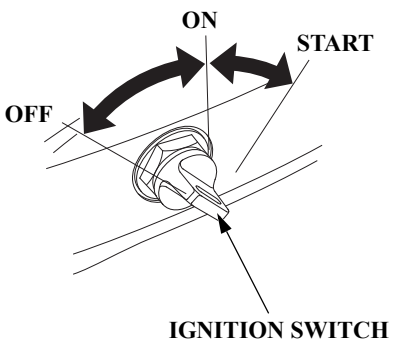

The ignition switch controls the ignition system and the starter motor.

Turning the ignition switch key to the START position operates the starter motor. The key automatically returns to the ON position when released from the START position.

The engine will not start unless the gearshift lever is in the N (neutral) position (p. 47) and the emergency stop switch clip is in the emergency stop switch.

Turning the ignition switch to the OFF position stops the engine.

Emergency Stop Switch Clip and Emergency Stop Switch

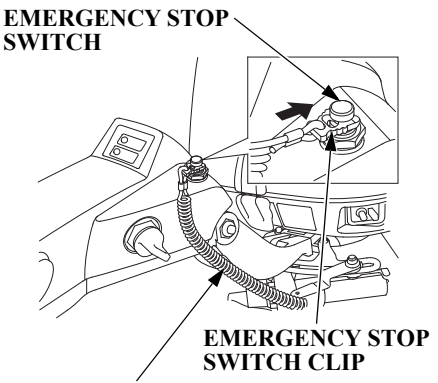

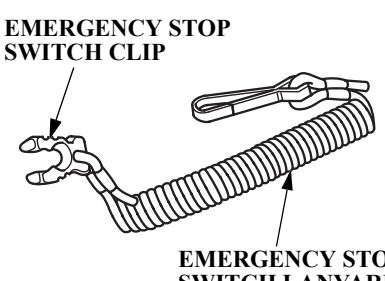

The emergency stop switch clip must be inserted in the emergency stop switch in order for the engine to start and run. The emergency stop switch lanyard must be attached securely to the operator or to the operator's PFD (Personal Flotation Device).

When used as described, the emergency stop switch and emergency stop switch lanyard system stops the engine if the operator falls away from the controls.

A spare switch clip is supplied with the outboard motor (p. 67).

Throttle Grip

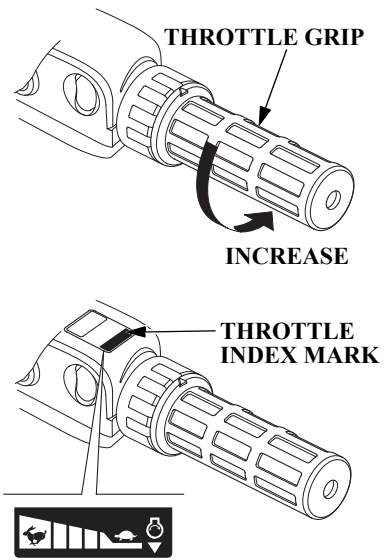

The throttle grip controls engine speed.

The throttle index mark shows throttle position and is helpful for setting the throttle correctly when starting (p. 47).

Throttle Friction Adjuster

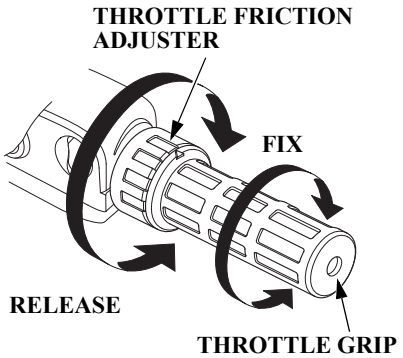

The throttle friction adjuster adjusts resistance to throttle grip rotation.

Turn the adjuster clockwise to increase friction for holding a throttle setting while cruising.

Turn the adjuster counterclockwise to decrease friction for easy throttle grip rotation.

Gearshift Lever

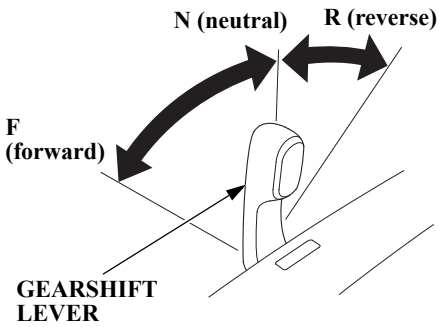

The gearshift lever is used to select F (forward), N (neutral), or R (reverse) gears.

The engine can be started with the gearshift lever in the N (neutral) position only.

Steering Friction Adjuster

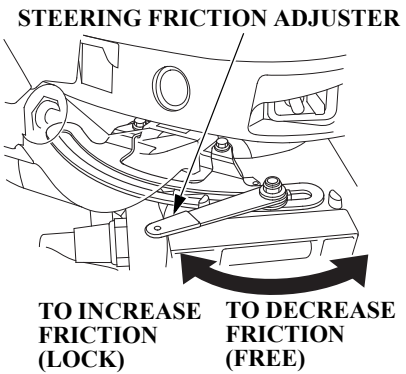

The steering friction adjuster adjusts steering resistance.

Less friction allows the outboard motor to turn more easily. More friction helps to hold a steady course while cruising or to prevent the outboard motor from swinging while trailering the boat.

Tilt Lever
SHG, LRG and LHG types

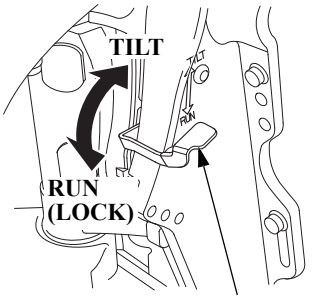

Moving the tilt lever to the TILT position allows the outboard motor to be tilted and moving the tilt lever to the RUN (LOCK) position locks the outboard motor in the desired position. Use the tilt lever to temporarily tilt the outboard motor when the boat is operating in shallow water, or mooring in shallow water. The tilt lever must be in the RUN (LOCK) position before operating the outboard motor or the outboard motor could tilt up when operating in reverse.

LRG, SRT and LRT Types [standard equipment (LRTC type)] [optional equipment (LRGA, SRTA and LRTA types)]

For panel-mount or top-mount remote control information, refer to the instructions provided with the remote control equipment.

Ignition Switch

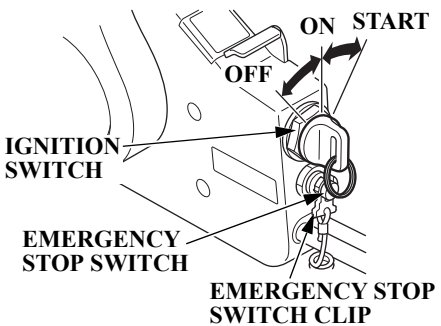

The ignition switch controls the ignition system and the starter motor.

Turning the ignition switch key to the START position operates the starter motor. The key automatically returns to the ON position when released from the START position.

The engine will not start unless the gearshift/throttle control lever is in the N (neutral) position (p. 49) and the emergency stop switch clip is in the emergency stop switch.

Turning the ignition switch to the OFF position stops the engine.

Emergency Stop Switch Clip and Emergency Stop Switch

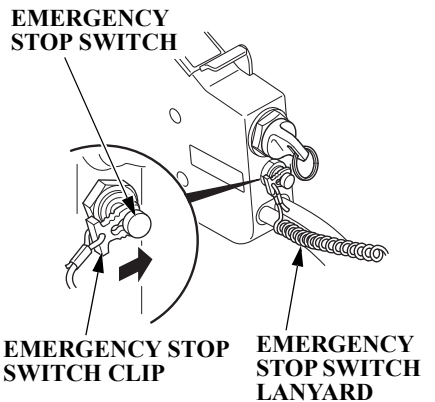

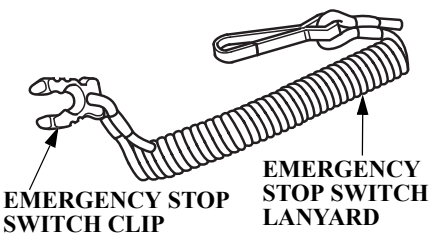

The emergency stop switch clip must be inserted in the emergency stop switch in order for the engine to start and run. The emergency stop switch lanyard must be attached securely to the operator or to the operator's PFD (Personal Flotation Device).

When used as described, the emergency stop switch clip and emergency stop switch lanyard system stops the engine if the operator falls away from the controls. A spare switch clip (optional equipment) can be stored in the tool bag.

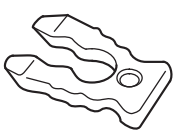

SPARE SWITCH CLIP
(optional equipment)

Fast Idle Lever

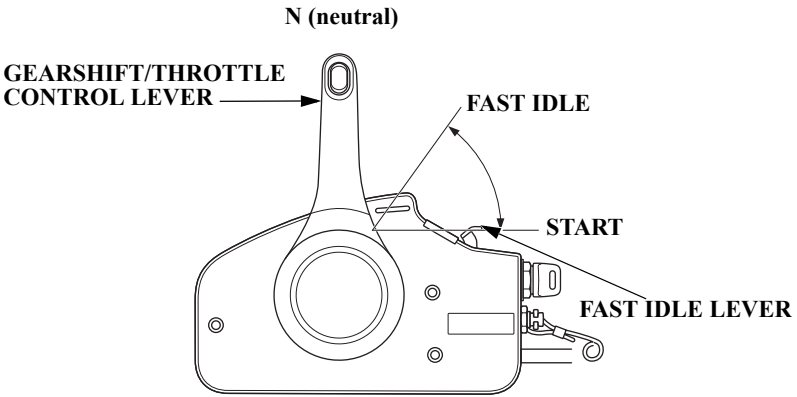

The fast idle lever is used to set idle speed during warm-up.

The lever will not move unless the gearshift/throttle control lever is in the N (neutral) position. The fast idle lever must be in its lowest position for you to move the gearshift/throttle control lever out of neutral.

Leave the fast idle lever in the START position to provide a rich fuel mixture for starting a cold engine.

Lift the fast idle lever to accelerate the warm up of a cold engine after starting and to start a warm engine.

Gearshift/Throttle Control Lever

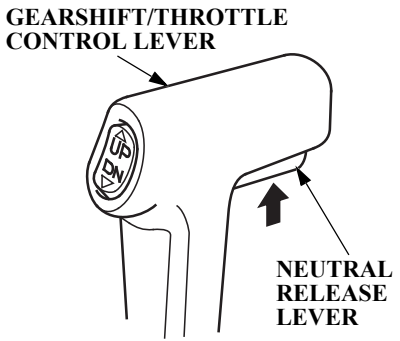

The gearshift/throttle control lever automatically locks itself in the N (neutral) position. To move the lever out of the N (neutral) position, you must squeeze the neutral release lever on the underside of the lever handle.

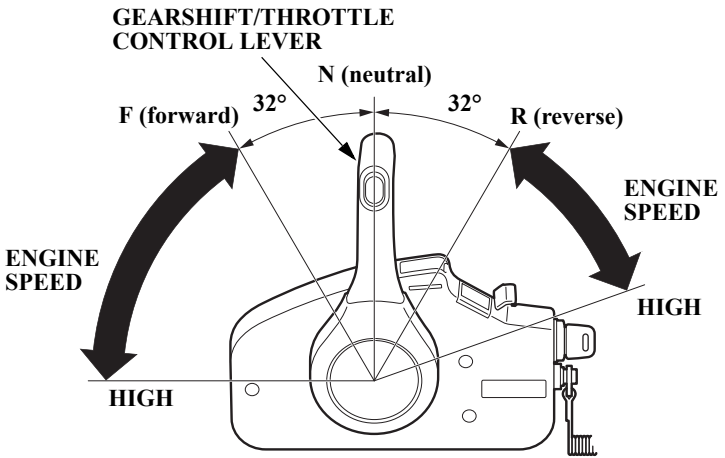

The gearshift/throttle control lever controls engine speed and selects F (forward), N (neutral), or R (reverse) gears.

Moving the control lever 32° from N (neutral) selects the gear, and further movement increases engine speed.

A friction adjuster adjusts the operating resistance of the control lever (p. 57).

Less friction allows easier control lever movement. More friction helps to hold a steady throttle setting while cruising.

Power Trim/Tilt Switch [standard equipment (LRTC type)] [optional equipment (SRTA and LRTA types)]

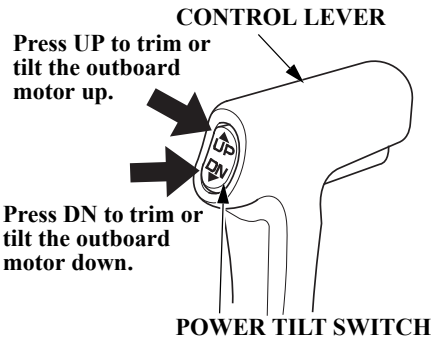

The power trim/tilt switch is located on the tiller handle or on the control lever. It is a rocker switch with UP and DN (down) positions for changing the angle of the outboard motor.

You can use the power tilt switch anytime the ignition switch is ON, whether the boat is underway or stopped.

Trim the outboard motor to obtain the best performance and stability (p. 59).

Tilt the outboard motor for shallow water operation, beaching, launching, or mooring.

Power Tilt Switch (SRT and LRT types)

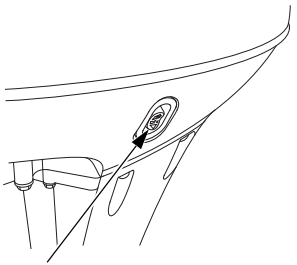

POWER TILT SWITCH

The power tilt switch is located on the engine pan. It is a rocker switch with UP and DN (down) positions for changing the angle of the outboard motor.

The power tilt switch will operate without turning the ignition switch ON.

This switch is used with the engine stopped to raise the outboard motor for mooring, trailering, or maintenance.

Manual Relief Valve (SRT and LRT types)

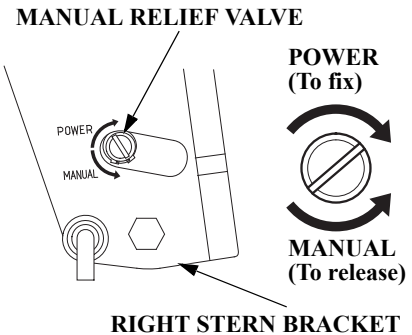

The outboard motor can also be tilted manually after opening the manual relief valve. This feature enables the outboard motor to be tilted up or down when no battery is connected. Check that nobody is under the outboard motor before opening the manual relief valve. If the manual relief valve is loosened (turned counterclockwise) when the outboard motor is tilted up, the outboard motor will suddenly tilt down.

Common Controls

Tilt Lock Lever

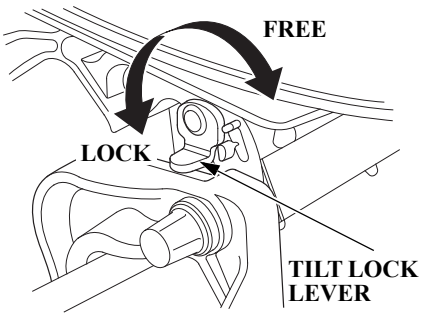

The tilt lock lever is used to support the outboard motor in the fully-raised position.

When the boat is to be moored for a long time, tilt the outboard motor up as far as it will go. Then move the tilt lock lever to the LOCK position, and gently lower the outboard motor until the lever contacts the stern bracket.

Engine Cover Latches

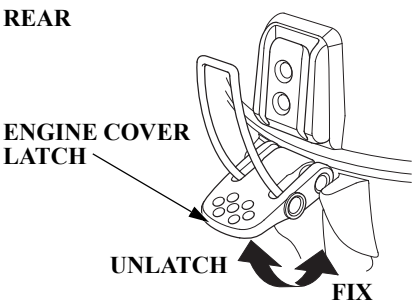

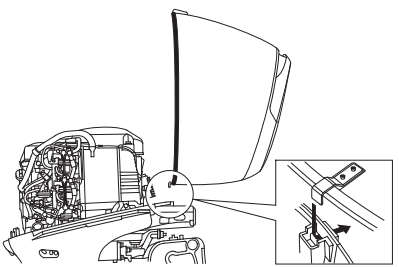

The engine cover latches fasten the engine cover to the outboard motor.

Transom Angle Adjusting Rod

The transom angle adjusting rod limits the tilt angle of the outboard motor when fully lowered.

Proper adjustment prevents the outboard motor from being trimmed too low (p. 44, 59 and 60).

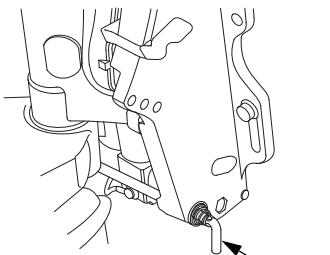

TRANSOM ANGLE ADJUSTING ROD (storage location)

There are four transom angle adjustment positions. Three are controlled by the adjusting rod and the fourth is controlled by the stern bracket. In order to use the fourth position, remove the adjusting rod and store it in the storage location; then lower the outboard motor down to the stern bracket stop position.

Trim Tab

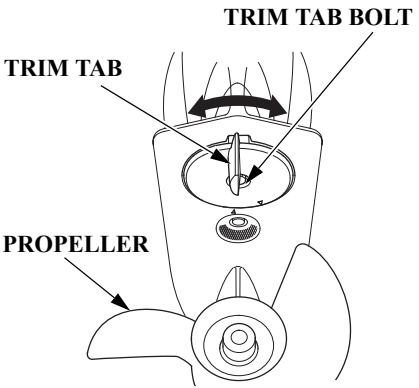

The trim tab compensates for ‘‘torque steer,’’ which is a reaction of the outboard motor to propeller rotation.

If uncompensated, torque steer would make the outboard motor tend to turn to one side.

When the trim tab is correctly adjusted (p. 70), steering effort is equal in either direction.

INSTRUMENTS

Trim Meter
[standard equipment (LRTC type)]
[optional equipment (SRTA and LRTA types)]

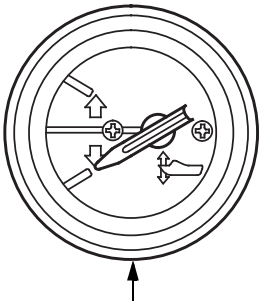

TRIM METER

The trim meter indicates the relative trim angle of the outboard motor.

Refer to the trim meter when using the power trim/tilt switch to achieve proper boat performance.

Tachometer
[standard equipment (LRTC type)]
[optional equipment (other types)]

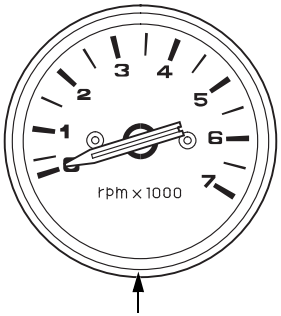

TACHOMETER

The tachometer shows engine speed in revolutions per minute.

Refer to the tachometer when using the throttle and power trim/tilt controls to achieve the best performance from the boat.

Fuel Gauge
[standard equipment (Canadian types)]
[optional equipment (American types)]

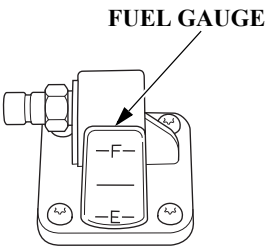

A fuel gauge is built into the fuel tank connector of the portable fuel tank.

INDICATORS

Oil Pressure Indicator

SHG and LHG Types

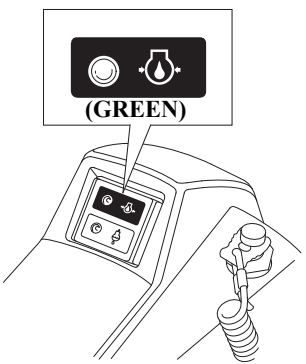

LRG, SRT and LRT Types [standard equipment (LRTC type)] [optional equipment (LRGA, SRTA and LRTA types)]

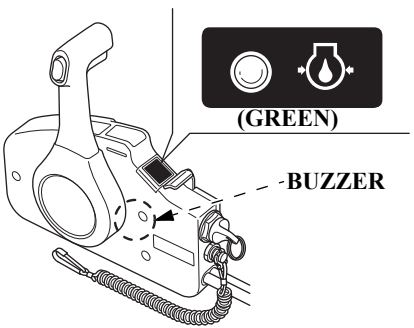

When the green light is lit, oil pressure is OK.

If oil pressure becomes low, the green light will go off, and the engine protection system will limit engine speed. Refer to *TAKING CARE OF UNEXPECTED PROBLEMS*, on p. 104.

Remote controls are also equipped with a buzzer that sounds continuously when the green light goes off.
The buzzer sound stops below an engine speed of 1,400 rpm.

Low oil pressure indicates that the engine oil level is low or that there is a problem with the engine lubrication system.

Overheat Indicator

SHG and LHG Types

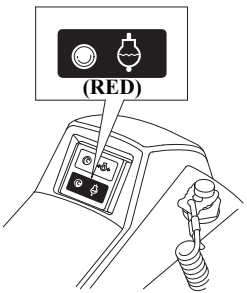

LRG, SRT and LRT Types [standard equipment (LRTC type)] [optional equipment (LRGA, SRTA and LRTA types)]

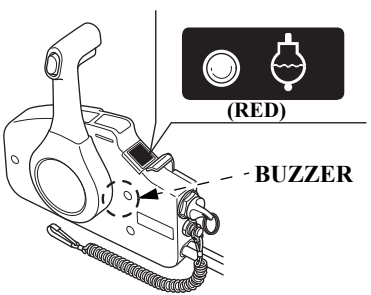

If the engine overheats, the red light will come on, and the engine protection system will limit engine speed.
When normal engine temperature is restored, the engine speed will gradually rise to normal engine speed.

If the condition persists for another 20 seconds, the engine will shut off. Refer to *TAKING CARE OF UNEXPECTED PROBLEMS*, on p. 105.

Remote controls are also equipped with a buzzer that sounds when the red light comes on.

Engine overheating may be the result of clogged water intakes.

Cooling System Indicator

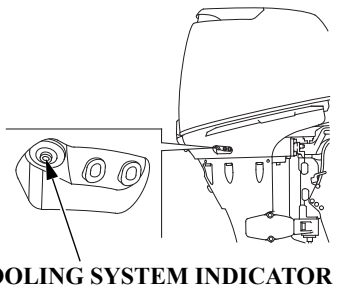

COOLING SYSTEM INDICATOR

Water should flow from the cooling system indicator while the engine is running. This shows that water is circulating through the cooling system.

If water stops flowing while the engine is running, it indicates a cooling system problem, such as clogged water intakes, which will cause engine overheating. Refer to *TAKING CARE OF UNEXPECTED PROBLEMS*, on p. 105.

The cooling system indicator discharge port can also become plugged.

OTHER FEATURES

Anodes

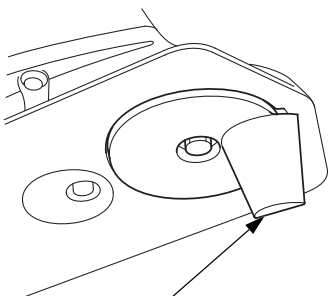

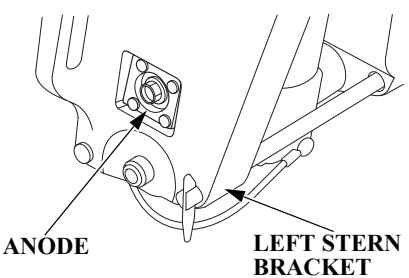

The anodes are made of a sacrificial material that helps to protect the outboard motor from corrosion.

There are two anodes, one on the left stern bracket, and another on the trim tab.

Overrev Limiter

The engine is equipped with an overrev limiter to prevent the possibility of mechanical damage from excessive engine speed.

The overrev limiter may be activated during operation, limiting engine speed, if the outboard motor is tilted excessively, or when propeller ventilation occurs during a sharp turn.

If the overrev limiter is activated, check the trim angle of the outboard motor.

Check to see if the correct propeller is installed.

Portable Fuel Tank [standard equipment (Canadian types)] [optional equipment (American types)]

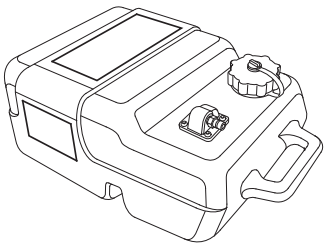

The portable fuel tank has a capacity of 6.6 US gal (25L) and has a fuel gauge built into the fuel tank connector.

Fuel Filler Cap Vent Knob

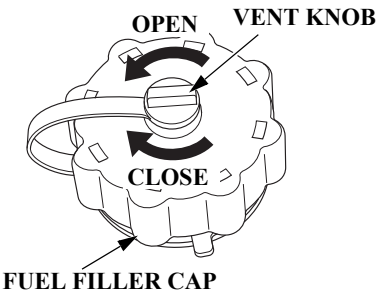

The fuel filler cap is provided with a vent knob to seal the portable fuel tank for carrying it to and from the boat. Turn the portable fuel tank vent knob counterclockwise to the open position before starting the engine.

Fuel Priming Bulb

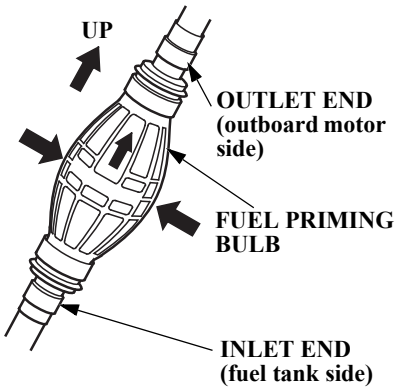

A priming bulb is built into the fuel hose that connects the fuel tank to the outboard motor.

Before starting the engine, hold the priming bulb up in the direction of the arrow, then squeeze the priming bulb until it feels firm. This will ensure that fuel is supplied to the engine.

Correct and secure installation is essential for safe boating and good performance. Follow the installation instructions provided in this manual.

POWER REQUIREMENTS

Before installation, check to be sure that the outboard motor does not exceed the recommended maximum horsepower for the boat on which it is to be installed. Refer to the boat's certification plate for recommended maximum horsepower. If the certification plate information is not available, contact the boat dealer or manufacturer.

For most applications, the outboard motor should have a horsepower rating which provides 80% of the maximum recommended horsepower for the boat.

BOAT TRANSOM REQUIREMENTS

Honda BF25D and BF30D outboard motors can be installed on a boat transom having a thickness range of 1.3 – 2.2 inches (35 – 57 mm).

INSTALLATION POSITION

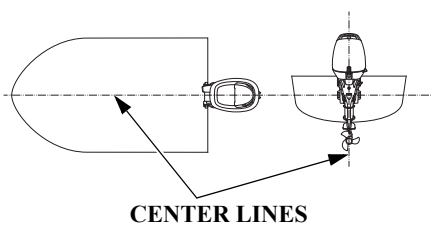

Install the outboard motor on the center of the boat transom.

The antiventilation plate of the outboard motor should be 0 – 2 in (0 – 50 mm) below the bottom of the boat.
The correct dimensions differ according to the type of boat and the configuration of the bottom of the boat. Follow the manufacturer's recommended installation height.

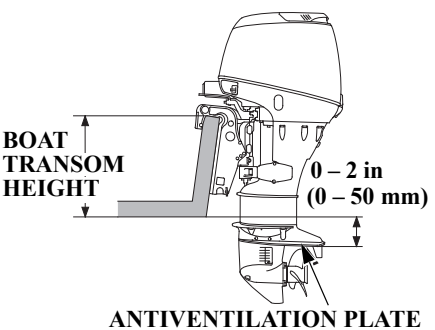

Type	Outboard Motor Transom Height (when transom angle is 12°)
S	17.0 in (431 mm)
L	21.7 in (552 mm)

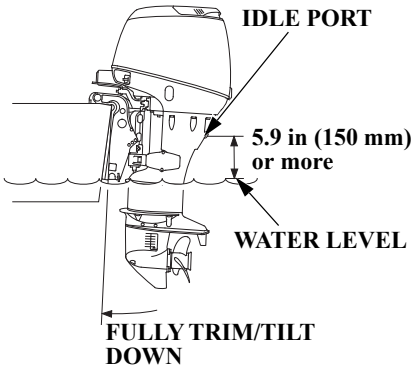

The water level must be at least 4 in (100 mm) above the antiventilation plate, otherwise the water pump may not receive sufficient cooling water, and the engine will overheat. Adverse effect to the engine can occur if the installation position of the outboard motor is too low. Trim/tilt down the outboard motor with the boat fully loaded and stop the engine. Check that the idle port is 5.9 in (150 mm) or more above the water level.

(Types with clamp screws)
If the outboard motor is installed too low, the boat will squat and be hard to plane, and the outboard motor will spray water that may enter the boat. It will tend to porpoise, and high-speed stability will be reduced.

If the outboard motor is installed too high, that will cause propeller ventilation.

Optimum installation height varies with boat type and bottom shape. Contact the boat manufacturer for any special recommendations that are unique to a specific model of boat.

If the transom needs to be modified to accommodate the outboard motor, contact the boat manufacturer and follow their recommendations for corrective action.

ATTACHMENT (tiller handle type)

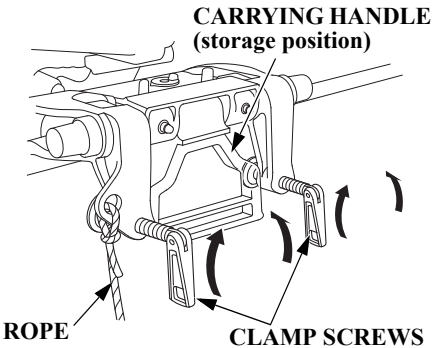

Attach the stern bracket to the boat transom by tightening the clamp screws. Push the carrying handle into the storage position. (tiller handle type)

Attach a rope from the boat to the hole in the stern bracket. This will help to prevent accidental loss of the outboard motor.

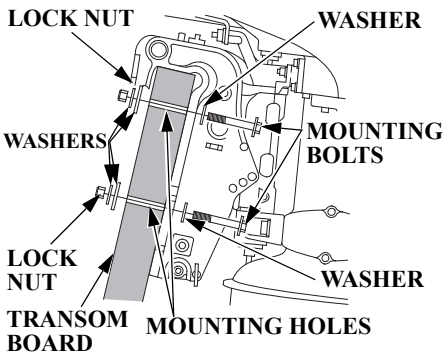

You may further secure the outboard motor by bolting the stern bracket to the boat transom. Use the mounting bolts and nut kit or other good quality stainless steel bolts, nuts, and washers. Apply silicone sealant to the bolt holes.

TRANSOM ANGLE ADJUSTMENT

Use the transom angle adjusting rod (p. 43) to adjust the angle of the outboard motor so the propeller is perpendicular to the surface of the water.

ELECTRICAL CONNECTIONS

Charging System

Honda BF25D and BF30D outboard motors produce a 12-volt, 10-ampere battery-charging current and are equipped for connection to a 12-volt battery. The battery-charging circuit is protected by a 15-ampere fuse located in the engine compartment.

The outboard motor's 12-volt output is designed to charge a ''starting or cranking'' battery only. It is not intended to charge a ''deep-cycle'' type battery. Lights and electrical accessories for the boat should be connected to the battery.

Battery Location

The battery should be kept in a corrosion-resistant battery box that is securely mounted in a location away from the fuel tank and protected from water and direct sunlight.

Battery

For complete information, refer to the battery manufacturer's instructions.

Minimum Requirements

12V-52Ah/5HR (65Ah/20HR)
(CCA 420)

Battery Connections

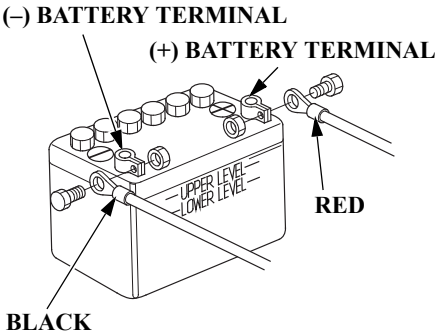

Connect the positive (+) battery cable to the positive (+) battery terminal, then connect the negative (–) battery cable to the negative (–) battery terminal.

The negative (–) battery cable should always be removed from the battery before connecting or disconnecting the positive (+) battery cable, so tools cannot cause a short circuit if they touch a grounded part while being used on the positive (+) battery terminal fitting.

NOTICE

- *Be careful to avoid connecting the battery in reverse polarity, as this will damage the battery-charging system in the outboard motor.*
- *Do not disconnect the battery cables while the engine is running. Disconnecting the cables while the engine is running will damage the outboard motor's electrical system.*
- *Battery cable extension: Extending the original battery cable will cause the battery voltage to drop due to the increased length of the cable and number of connections. The outboard may not start if the battery voltage reaching the engine is too low.*

WARNING: Battery posts, terminals, and related accessories contain lead and lead compounds. **Wash your hands after handling.**

BEFORE OPERATION

ARE YOU READY TO GET UNDERWAY?

Your safety is your responsibility. A little time spent in preparation will significantly reduce your risk of injury.

Knowledge

Read and understand this manual. Know what the controls do and how to operate them.

Familiarize yourself with the outboard motor and its operation before you get underway. Know what to do in case of an emergency.

Familiarize yourself with all laws and regulations relating to boating and the use of outboard motors.

Safety

Always wear a PFD (Personal Flotation Device) while on the boat.

Attach the emergency stop switch lanyard securely to the operator or to the operator's PFD.

IS YOUR OUTBOARD MOTOR READY TO GO?

For your safety, and to maximize the service life of your equipment, it is very important to take a few moments before you operate the outboard motor to check its condition.
Be sure to take care of any problem you find, or have your authorized Honda Marine dealer correct it, before you operate the outboard motor.

⚠ WARNING

Improperly maintaining this outboard motor or failing to correct a problem before operation can cause a malfunction in which you could be seriously hurt or killed.

Always perform a pre-operation inspection before each operation, and correct any problem.

Before beginning your pre-operation checks, be sure the switch clip is removed or the ignition switch is in the OFF position.

Safety Inspection

- Before each use, look around and underneath the engine for signs of oil or gasoline leaks.
- If you are using the portable fuel tank, make sure it is in good condition and properly secured in the boat (p. 44).
- Check that the fuel hose is undamaged and properly connected (p. 45).
- Wipe up any spills before starting the engine.
- Check the stern bracket to be sure the outboard motor is securely installed.
- Check that all controls are operating properly.
- Replace any damaged parts.
- Check that all fasteners are in place and securely tightened.
- Check the emergency stop switch for proper operation. Start the engine (p. 46, 49 or 54). Make sure the engine stops by pulling the emergency stop switch clip from the emergency stop switch.

Maintenance Inspection

- Check the engine oil level (p. 72). Running the engine with a low oil level can cause engine damage. Overfilling the engine can cause the engine to smoke or have oil leaks which can cause engine damage.
- Check to be sure the propeller is undamaged and the castle nut is secured with the cotter pin (p. 86).
- Check that the stern bracket anode and the trim tab are securely attached and are not excessively worn. The anodes help to protect the outboard motor from corrosion.
- Make sure the tool kit and emergency starter rope are onboard (p. 67). Replace any missing items.
- Check the fuel level in the fuel tank (p. 79).
- Check that the battery fluid is between the upper and lower levels, and the battery leads are connected securely.

OPERATION

SAFE OPERATING PRECAUTIONS

To safely realize the full potential of this outboard motor, you need a complete understanding of its operation and a certain amount of practice with its controls.

Before operating the outboard motor for the first time, please review the *IMPORTANT SAFETY INFORMATION* on page 7 and the chapter titled *BEFORE OPERATION*.

For your safety, do not start or run the engine in a confined or partly enclosed area. Your engine's exhaust contains poisonous carbon monoxide, a colorless, odorless gas that can collect rapidly. Breathing carbon monoxide can cause loss of consciousness and may lead to death.

BREAK-IN PROCEDURE

Break-in period: 10 hours

Proper break-in operation allows the moving parts to wear in smoothly for best performance and long service life. Avoid continuous operation at a steady speed.

First 15 minutes:
Run the engine at trolling speed. Use the minimum throttle opening necessary to operate the boat at a safe trolling speed.

Next 45 minutes:
Run the engine up to a maximum of 2,000 to 3,000 rpm, which is about 10% to 30% of maximum throttle opening. Operating at maximum 2,000 ~ 3,000 rpm should be limited to 50% of the 45 minutes.

Next 60 minutes:
Run the engine up to a maximum of 4,000 to 5,000 rpm, which is about 50% to 80% of maximum throttle opening. Operating at maximum 4,000 ~ 5,000 rpm should be limited to 50% of the 60 minutes.
30-second full-throttle bursts are OK, but do not operate the engine continuously at full throttle.

For boats that plane easily, bring the boat up on plane, and then reduce the throttle opening to the recommended rpm range.

Next 8 hours:
Do not run the engine at full throttle for more than 5 minutes at a time.

TRANSOM ANGLE ADJUSTMENT

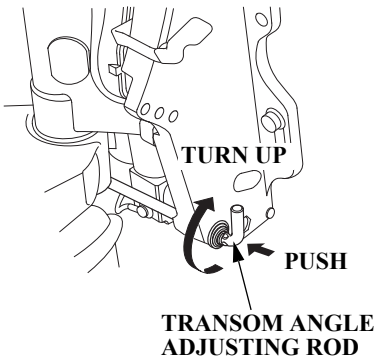

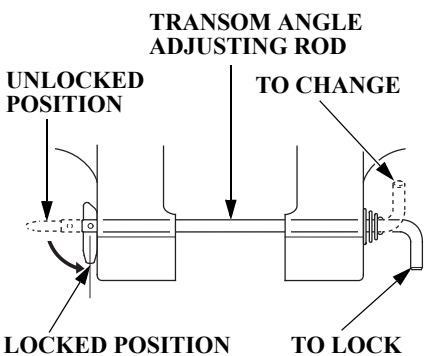

The transom angle adjusting rod limits the tilt angle of the outboard motor when fully lowered.

Proper adjustment prevents the outboard motor from being trimmed too low (p. 59 and 60).

To adjust, first tilt the outboard motor so it is not resting on the rod.

Push the rod in and turn the end of the rod up, so the latch will fall into line with the rod.

Remove the rod and reinsert it in the desired position.

Push the rod in and turn the end of the rod down, so the latch will fall to the locked position. Then release the rod.

NOTICE

Do not allow water to enter the idle exhaust port or the engine can be damaged.

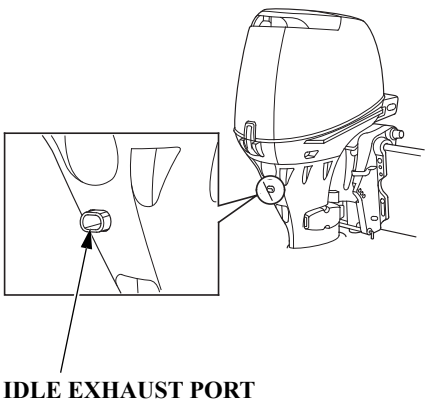

Outboard Motor Angle Inspection (Cruising)

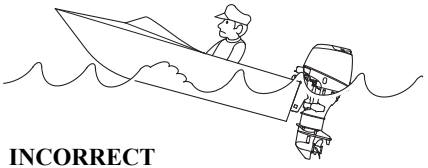

INCORRECT
CAUSES BOAT TO "SQUAT"

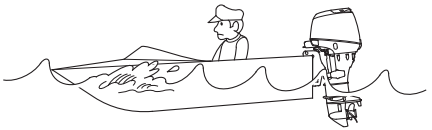

INCORRECT
CAUSES BOAT TO "BOW STEER"

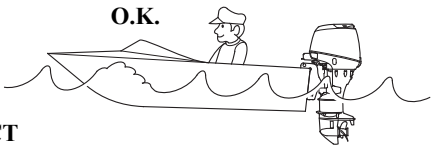

O.K.

CORRECT
GIVES MAXIMUM PERFORMANCE

Install the outboard motor at the best trim angle for stable cruising and maximum power.
Trim angle too large: Causes boat to "squat."
Trim angle too small: Causes boat to "bow steer."

The trim angle differs according to the combination of the boat, outboard motor, and propeller, and the operating condition.

PORTABLE FUEL TANK [standard equipment (Canadian types)] [optional equipment (American types)]

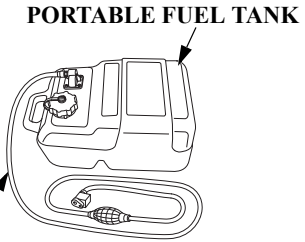

Place the portable fuel tank in a well-ventilated location, away from direct sunlight, to reduce the possibility of a gasoline vapor explosion.

To ensure that the outboard motor will be able to draw fuel from the tank, place the tank within 6 feet (2 m) of the outboard motor and not more than 3 feet (1 m) below the fuel connector on the outboard motor.

Secure the portable fuel tank in the boat so that it won't move around and become damaged.

⚠ WARNING

Gasoline is highly flammable and explosive, and you can be burned or seriously injured when handling fuel.

- Stop the engine and let it cool before handling fuel.
- Keep heat, sparks, and flame away.
- Handle fuel only outdoors.
- Wipe up spills immediately.

FUEL HOSE CONNECTIONS

Turn the portable fuel tank vent knob counterclockwise to the open position.

FUEL HOSE CONNECTOR

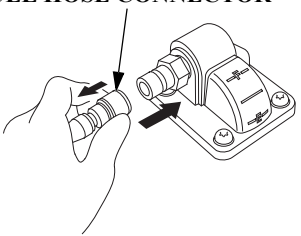

(fuel tank side)

FUEL HOSE CONNECTOR

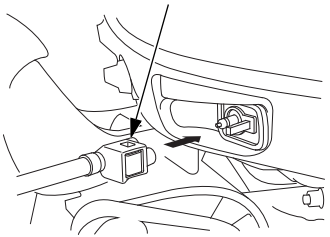

(outboard motor side)

Connect the fuel hose to the tank and the outboard motor, as shown. Be sure both connectors snap securely into place. Always disconnect the fuel hose when storing or transporting the outboard motor.

FUEL PRIMING

If you are using a portable fuel tank, turn the portable fuel tank vent knob counterclockwise to the open position.

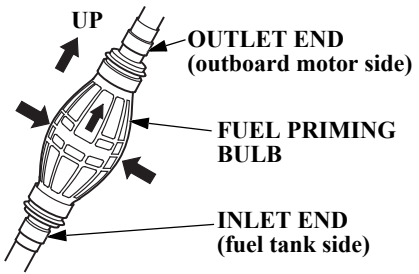

Hold the fuel priming bulb with the outlet end higher than the inlet end. Squeeze the priming bulb several times, until it feels firm, indicating that fuel has reached the carburetor.

Check to be sure there are no fuel leaks before starting the engine.

Do not touch the priming bulb with the engine running or when tilting up the outboard motor. The carburetors could overflow.

INFREQUENT OR OCCASIONAL USE

If your outboard motor will be used on an infrequent or intermittent basis, please refer to the fuel section of the *STORAGE* chapter (p. 91) for additional information regarding fuel deterioration.

STARTING THE ENGINE

SHG and LHG Types (long tiller handle)

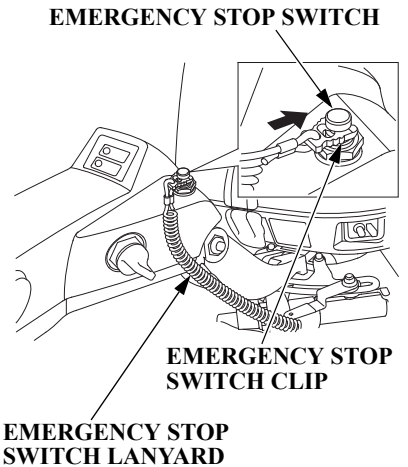

1. Put the emergency stop switch clip in the emergency stop switch, and attach the emergency stop switch lanyard securely to the operator or to the operator's PFD (Personal Flotation Device).

The engine will not start or run unless the emergency stop switch clip is in the emergency stop switch.

The emergency stop switch clip and emergency stop switch lanyard system is a safety device that will stop the engine if you fall away from the controls while operating the boat.

Always attach the emergency stop switch lanyard securely to the operator or to the operator's PFD before starting the engine.

Before leaving the dock, check the operation of the emergency stop switch.

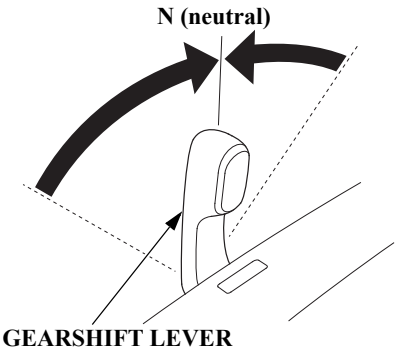

2. Check the position of the gearshift lever. It must be in the N (neutral) position for starting.

   The engine will not start if the gearshift lever is in the F (forward) or R (reverse) position.

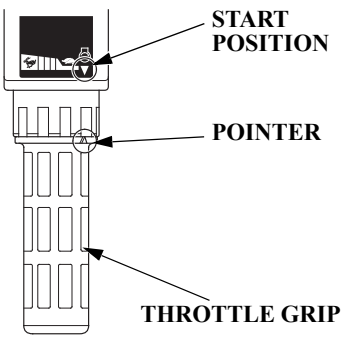

3. Align the engine start symbol " ⏻ " on the tiller handle with the pointer " ▶ " on the throttle grip.

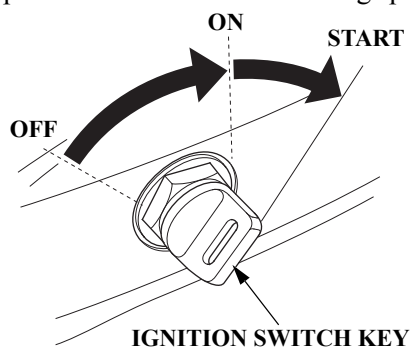

4. Turn the ignition switch key to the START position and hold it there until the engine starts.
   When the engine starts, release the key, allowing it to return to the ON position.

   If the engine fails to start within 5 seconds, release the key and wait at least 10 seconds before operating the starter again.

NOTICE

- *Using the electric starter for more than 5 seconds at a time will overheat the starter motor and can damage it.*
- *Turning the ignition switch key to the START position while the engine is running can damage the starter motor and flywheel.*

Also, as the engine warms up, the throttle grip can be turned to the SLOW position without stalling.

5. Before getting underway, allow the engine to warm-up sufficiently to ensure good performance.

   Above 41°F (5°C), warm-up the engine for at least 3 minutes.

   Below 41°F (5°C), warm up the engine for at least 10 minutes at approx. 2,000 rpm.

NOTICE

- *If the engine is not properly warmed up before raising the engine speed, the buzzer and overheat indicator may activate and the engine speed will be automatically reduced.*
- *The cooling system may freeze in areas where the temperature reaches 32°F (0°C) or below. Cruising at high speed without warming the engine up may cause engine damage.*

During the warm-up period, check the oil pressure indicator (p. 30), overheat indicator (p. 31) and cooling system indicator (p. 31).

If the indicators show any abnormal condition, immediately stop the engine and determine the cause of the problem. Refer to *TAKING CARE OF UNEXPECTED PROBLEMS* on p. 104.

LRG, SRT and LRT Types (remote control)

For panel-mount or top-mount remote control information, refer to the instructions provided with the remote control equipment.

Side-Mount Type [standard equipment (LRTC type)] [optional equipment (LRGA, SRTA and LRTA types)]

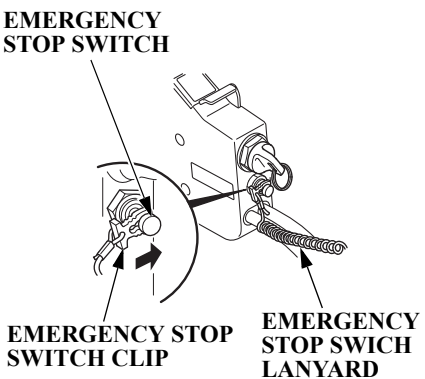

1. Put the emergency stop switch clip in the emergency stop switch, and attach the emergency stop switch lanyard securely to the operator or to the operator's PFD (Personal Flotation Device).

   The engine will not start or run unless the emergency stop switch clip is in the emergency stop switch.

   The emergency stop switch clip and emergency stop switch lanyard system is a safety device that will stop the engine if you fall away from the controls while operating the boat.

   Always attach the emergency stop switch lanyard securely to the operator or to the operator's PFD before starting the engine.
   Before leaving the dock, check the operation of the emergency stop switch.

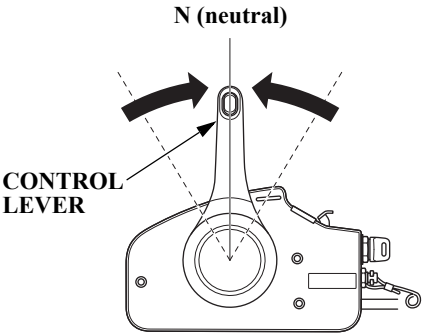

2. Set the control lever in the N (neutral) position.

   The engine will not start if the F (forward) or R (reverse) gears are engaged.

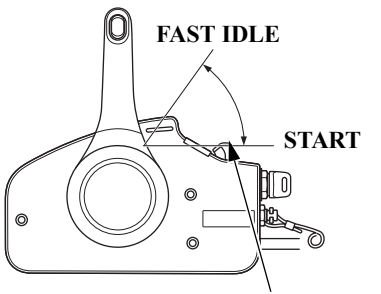

3. To start a cold engine, leave the fast idle lever in the START (fully lowered) position.

   To restart a warm engine, raise the fast idle lever.

   The fast idle lever cannot be raised unless the control lever is in the N (neutral) position.

   The control lever cannot be moved away from the N (neutral) position unless the fast idle lever is lowered.

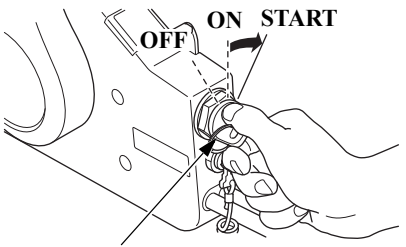

4. Turn the ignition switch key to the START position and hold it there until the engine starts.
   When the engine starts, release the key, allowing it to return to the ON position.

   If the engine fails to start within 5 seconds, release the key and wait at least 10 seconds before operating the starter again.

NOTICE

- *Using the electric starter for more than 5 seconds at a time will overheat the starter motor and can damage it.*
- *Turning the ignition switch key to the START position while the engine is running can damage the starter motor and flywheel.*

5. Before getting underway, allow the engine to warm-up sufficiently to ensure good performance.

   Above 41°F (5°C), warm-up the engine for at least 3 minutes.

   Below 41°F (5°C), warm up the engine for at least 10 minutes at approx. 2,000 rpm.

NOTICE

- *If the engine is not properly warmed up before raising the engine speed, the buzzer and overheat indicator may activate and the engine speed will be automatically reduced.*
- *The cooling system may freeze in areas where the temperature reaches 32°F (0°C) or below. Cruising at high speed without warming the engine up may cause engine damage.*

During the warm-up period, check the oil pressure indicator (p. 30), overheat indicator (p. 31), and cooling system indicator (p. 31).

If the indicators show any abnormal condition, immediately stop the engine and determine the cause of the problem. Refer to *TAKING CARE OF UNEXPECTED PROBLEMS* on p. 104.

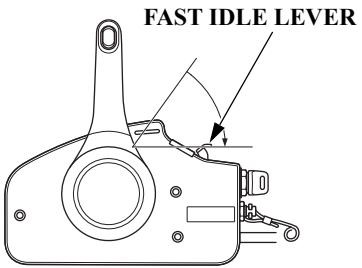

6. If the fast idle lever was used to start the engine, gradually lower the lever as the engine warms up.

   When the fast idle lever is fully lowered, the control lever can be moved away from the N (neutral) position.

EMERGENCY STARTING

If the battery is discharged or the starter motor is inoperative, you can start the engine manually using the emergency starter rope that came with your outboard motor.

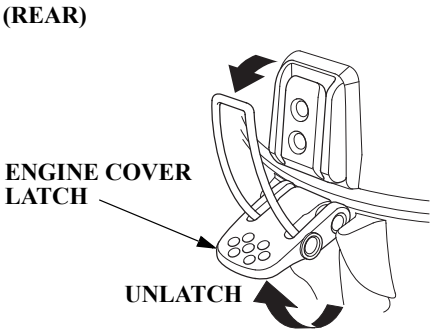

1. Unlatch the engine cover latch and remove the engine cover.

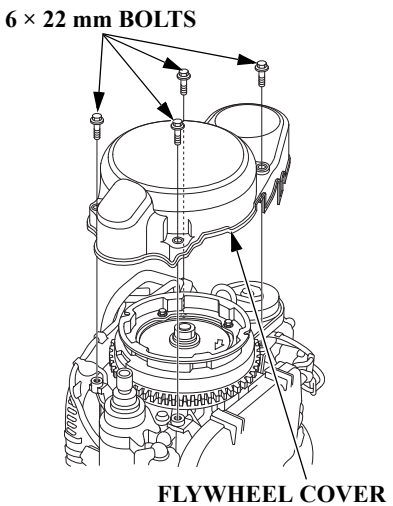

2. Remove the flywheel cover by unscrewing the four 6 × 22 mm bolts.

3. Set the controls the same as for normal starting (see pages 46 – 51). Use the fast idle control if needed.

   Turn the ignition switch key to the ON position.

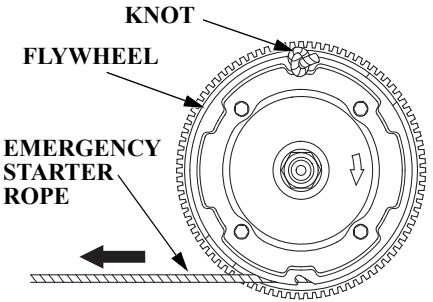

4. Set the knot at the end of the emergency starter rope in the notch in the flywheel. Wind the rope clockwise around the flywheel, as shown.

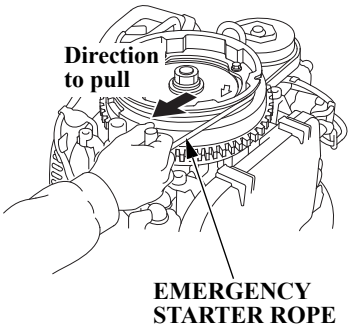

5. Pull the emergency starter rope slowly until resistance is felt, then pull briskly.

   Keep away from moving parts while pulling the rope.

   If necessary, rewind the rope and pull again. If the engine does not start after several attempts, refer to *TAKING CARE OF UNEXPECTED PROBLEMS* from p. 98.

⚠ WARNING

Exposed moving parts can cause injury.

- Do not operate the outboard motor without the engine cover.
- Use extreme care when installing the engine cover.

6. If the fast idle control(s) was used to start the engine, return the control(s) to the normal operating position as the engine warms up.

   During the warm-up period, check the oil pressure indicator (p. 30), overheat indicator (p. 31), and cooling system indicator (p. 31).

7. Leave the flywheel cover off, but install the engine cover (p. 71) and lock it in place by latching the engine cover latch.

8. If it was necessary to remove the emergency stop switch lanyard from you to perform the emergency starting procedure, be sure the lanyard is attached securely to operator before operating the outboard motor.

9. Have your closest authorized Honda Marine dealer check your electrical system and correct the problem so that you can use the electric starter.

STOPPING THE ENGINE

Emergency Engine Stopping

SHG and LHG Types (long tiller handle)

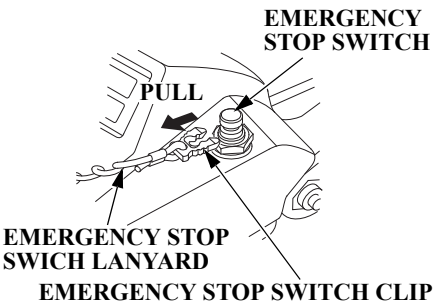

LRG, SRT and LRT Types (remote control)

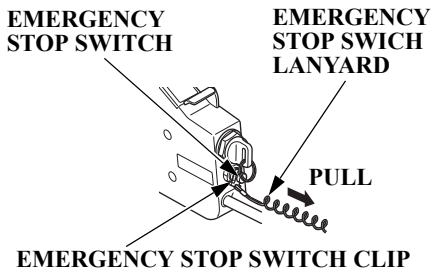

To stop the engine in an emergency, pull the emergency stop switch clip out of the emergency stop switch by pulling the emergency stop switch lanyard.
We suggest that you stop the engine this way occasionally to verify that the emergency stop switch is operating properly.

Before leaving the dock, check the operation of the emergency stop switch.

Turn the ignition switch key to the OFF position after verifying the emergency stop switch operation.

Normal Engine Stopping

SHG and LHG Types (long tiller handle)

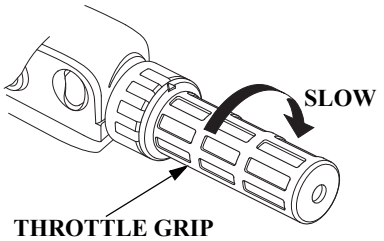

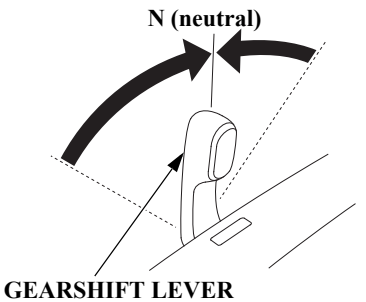

LRG, SRT and LRT Types [remote control (side-mount type)]

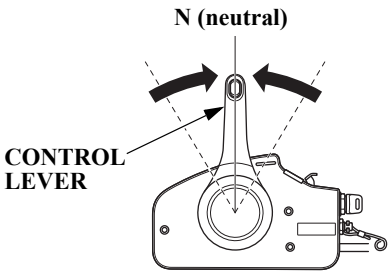

1. Move the throttle grip to the slowest speed and the gearshift lever or control lever to the N (neutral) position.

   After cruising at full throttle, cool down the engine by idling for a few minutes before stopping the engine.

SHG and LHG Types (long tiller handle)

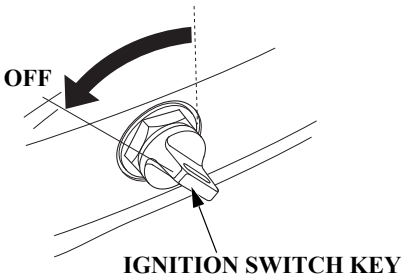

LRG, SRT and LRT Types (remote control)

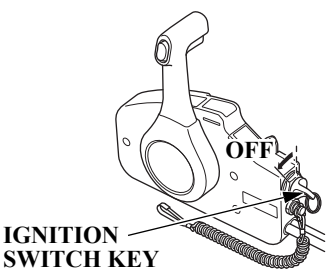

2. Turn the ignition switch key to the OFF position to stop the engine. In the event that the engine does not stop when the ignition switch key is turned to the OFF position, pull the emergency stop switch clip out of the emergency stop switch by pulling the emergency stop switch lanyard (p. 54).

3. When the boat is not in use, remove and store the ignition switch key and the emergency stop switch clip and lanyard. If you are using a portable fuel tank, disconnect the fuel hose if you will be storing or transporting the outboard motor.

GEARSHIFT AND THROTTLE OPERATION

SHG and LHG Types (long tiller handle)

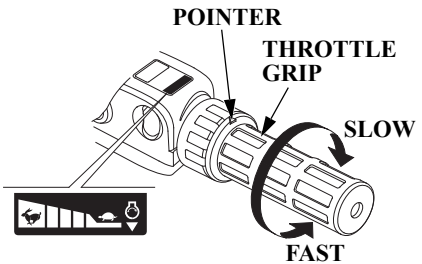

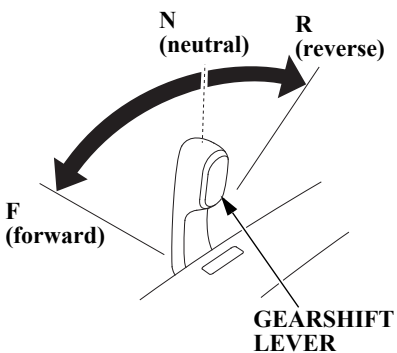

To shift gears, turn the throttle grip to the SLOW position; then move the gearshift lever to select the F (forward), N (neutral), or R (reverse) gears.

The engine can be started with the gearshift lever in the N (neutral) position only.

The throttle grip can be turned to the FAST position only when the gearshift lever is in the F (forward) position.

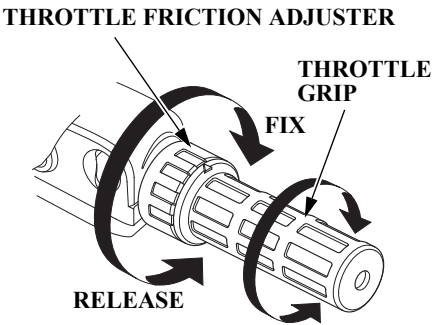

Use the throttle friction adjuster to help hold a constant throttle setting while cruising.

Turn the adjuster clockwise to increase throttle grip friction for holding a constant speed.

Turn the adjuster counterclockwise to decrease friction for easy grip rotation.

LRG, SRT and LRT Types [remote control (side-mount type)]

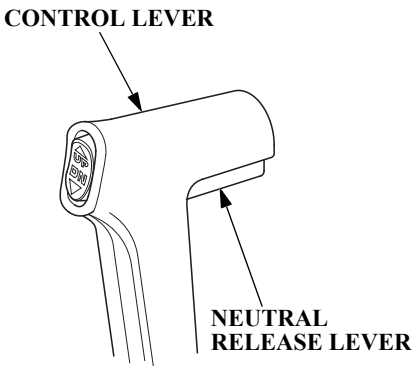

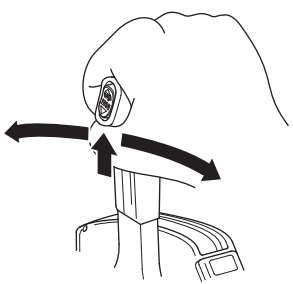

To shift gears, move the control lever to select the F (forward), N (neutral), or R (reverse) gear.

The control lever cannot be moved from the N (neutral) position unless the neutral release lever is squeezed.

Moving the control lever beyond the gear selection range increases engine speed.

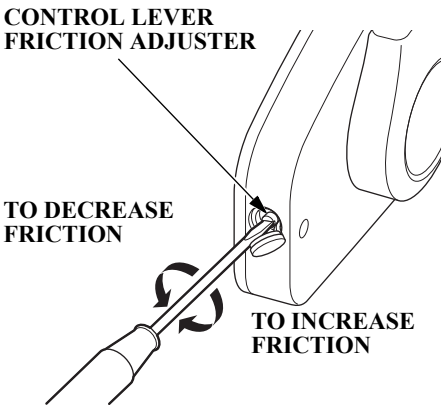

Adjust the control lever friction adjuster so the control lever will hold a constant throttle setting while cruising.

STEERING

SHG and LHG Types (long tiller handle)

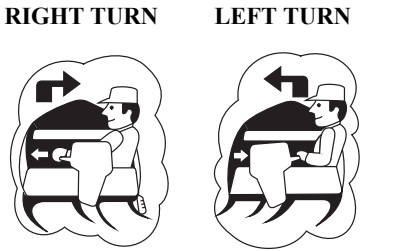

Steer by moving the tiller handle opposite the direction you want the boat to turn.

Steering Friction Adjuster

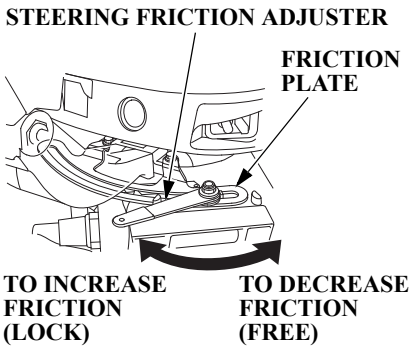

Use the steering friction adjuster to help hold a steady course while cruising.

Move the adjuster to the LOCK direction to increase steering friction for holding a steady course.

Move the adjuster to the FREE direction to decrease friction for easy turning.

NOTICE

Do not apply grease or oil on the friction plate. Grease or oil will reduce the friction of the adjuster.

LRG, SRT and LRT Types (remote control)

Steer the boat in the same manner as an automobile.

CRUISING

Engine Speed

For best fuel economy, limit the throttle opening to 80%. Use the throttle friction control (p. 56 and 57) to help you hold a steady speed.

For rough water conditions or large waves, slow down to prevent the propeller from rising out of the water.

The engine is equipped with an overrev limiter to prevent the possibility of mechanical damage from excessive engine speed.

If, for example, the outboard motor is tilted excessively or propeller ventilation occurs during a sharp turn, the engine may overrev, activating the overrev limiter.

If engine speed becomes unstable at high speed due to activation of the overrev limiter, reduce speed and check the trim angle of the outboard motor.

Trim

SHG, LRG and LHG Types

Install the outboard motor at the best trim angle for stable cruising and maximum power.

Trim angle too large: Causes boat to "squat."

Trim angle too small: Causes boat to "bow steer."

It is necessary to trim the angle of the outboard motor to compensate for changes in boat load, weight distribution, water conditions, or propeller selection.

Under normal conditions, the boat will perform best when the antiventilation plate is level with the water surface.

When cruising into a high wind, trim the outboard motor down slightly to level the boat and improve stability. With a tail wind, trim the outboard motor up slightly.

SRT and LRT Types

Use the power trim/tilt switch to trim the outboard motor for the best performance and stability.

You can use the power trim/tilt switch at any time, whether the boat is underway or stopped.

Press the UP or DN (down) side of the switch to adjust the angle of the outboard motor.

Refer to the trim meter (p. 29) for an indication of whether the outboard motor is trimmed high or low.

It is necessary to trim the angle of the outboard motor to compensate for changes in boat load, weight distribution, water conditions, or propeller selection.

Under normal conditions, the boat will perform best when the antiventilation plate is level with the water surface.

When cruising into a high wind, adjust the outboard motor down slightly to level the boat and improve stability. With a tail wind, adjust the outboard motor up slightly.

NOTICE

Excessive trim/tilt angle during operation can cause propeller ventilation, overheating, and water pump damage. This type of damage is not covered by the Distributor's Limited Warranty *(p. 121)*.

SRT and LRT Types

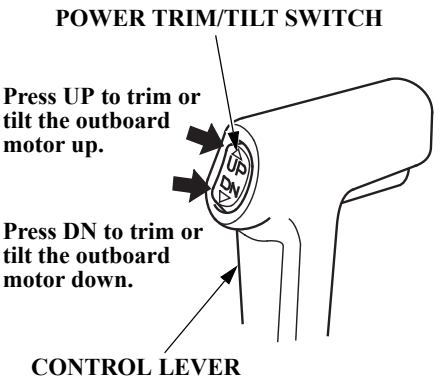

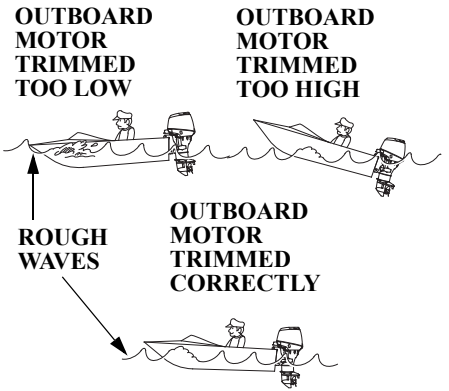

CORRECT TRIM/TILT ANGLE GIVES MAXIMUM PERFORMANCE

BOW TOO LOW DUE TO
1. LOAD IN THE FRONT
2. OUTBOARD MOTOR TRIMMED TOO LOW

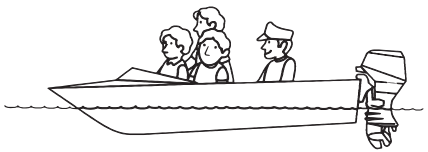

BOW TOO HIGH DUE TO
1. LOAD IN THE REAR
2. OUTBOARD MOTOR TRIMMED TOO HIGH

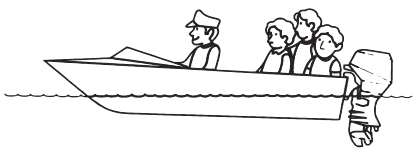

TRIM TAB

If steering effort is not equal in both directions, adjust the trim tab to compensate for ‘‘torque steer,’’ which is the reaction of the outboard motor to propeller rotation.

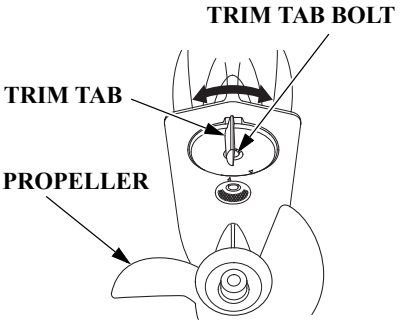

Adjust the trim tab (p. 70) with the engine stopped. Loosen the trim tab bolt above the trim tab, turn the trim tab, and then tighten the bolt securely.

When the trim tab is correctly adjusted, steering effort will be equal in both directions.

SHALLOW WATER OPERATION

SRT and LRT Types

When operating in shallow water, use the power trim/tilt switch (p. 60) to tilt the outboard motor so that the propeller and gear case won’t hit the bottom.

Proceed at low speed, and monitor water flow from the cooling system indicator (p. 31) to be sure the outboard motor is not tilted so high that the water intakes are out of the water.

NOTICE

An excessive trim/tilt angle during operation can cause propeller ventilation, overheating, and water pump damage. This type of damage is not covered by the Distributor’s Limited Warranty *(p. 121)*.

SHG, LRG and LHG Types

When operating in shallow water, tilt the outboard motor, using the tilt lever, so the propeller and gear case won't hit the bottom.

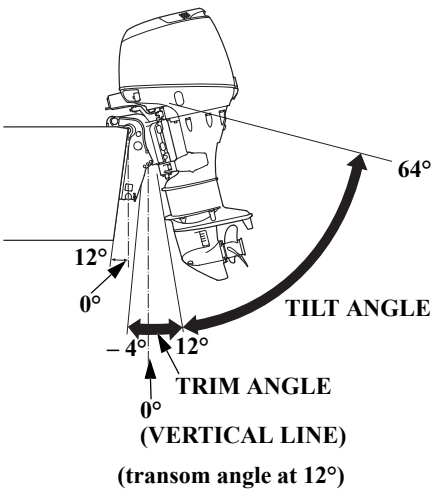

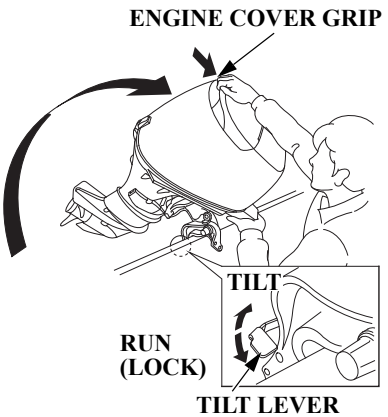

To tilt the outboard motor, move the tilt lever to the TILT position, then raise the outboard motor to the desired position by pulling on the engine cover grip.

NOTICE

Do not use the tiller handle as a lever to raise the outboard motor. Applying excessive force to the tiller handle can damage it.

While the outboard motor is tilted, proceed at a low speed, and do not operate the outboard motor in reverse. The outboard motor will rise suddenly if operated in reverse.

Monitor water flow from the cooling system indicator (p. 31) to be sure the outboard motor is not tilted so high that the water intake is out of the water.

NOTICE

An excessive tilt angle during operation can cause propeller ventilation, overheating, and water pump damage. This type of damage is not covered by the Distributor's Limited Warranty *(p. 121)*.

To return the outboard motor to the normal operating position, move the tilt lever to the LOCK (RUN) position. You may need to raise the outboard motor slightly to disengage the tilt mechanism, and then slowly lower the outboard motor.

MOORING, BEACHING, LAUNCHING

Before tilting up, leave the outboard motor in the running position for one minute after stopping the engine to drain the water from inside the engine.

Stop the engine and disconnect the fuel hose from the outboard motor before tilting the outboard motor.

SHG, LRG and LHG Types

Use the tilt lever to raise and lower the outboard motor as described on p. 62.

SRT and LRT Types

To raise the outboard motor out of the water while the engine is stopped and the boat is moored, or for maximum clearance when beaching or launching, use the power tilt switch on the engine pan to tilt the outboard motor up as far as it will go, move the tilt lock lever to the LOCK position, then gently lower the outboard motor until the lever contacts the stern bracket.

If more clearance is needed to swing the tilt lock lever into the LOCK position, rock the outboard motor forward slightly by pulling on the engine cover grip.

To lower the outboard motor, tilt up, move the tilt lock lever to the FREE position, and then lower the outboard motor to the desired position.

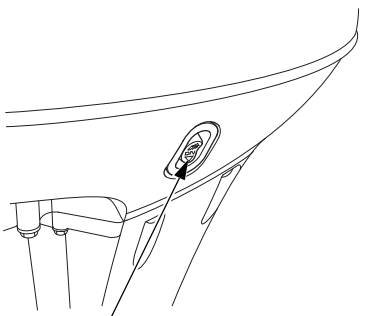

POWER TILT SWITCH (SRT and LRT types)

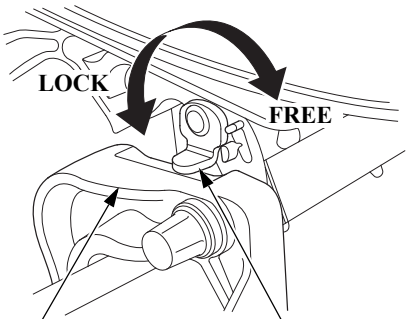

NOTICE

Do not attempt to use the power tilt switch to tilt the outboard motor down while the tilt lock lever is in the LOCK position. Damage to the power tilt system may occur.

MANUAL RELIEF VALVE
SRT and LRT Types

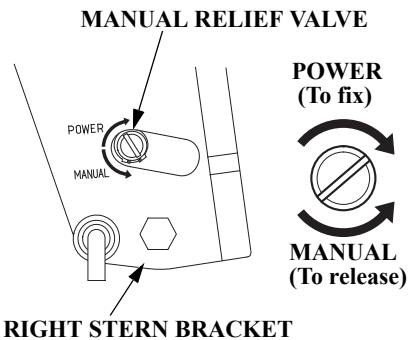

The outboard motor can also be tilted manually after opening the manual relief valve. This feature enables the outboard motor to be tilted when no battery is connected.

For manual tilting, use a flat blade screwdriver to turn the valve counterclockwise 2 and a half turns. Close the valve firmly after positioning the engine.

Be sure the valve is closed before operating the outboard motor. If the valve is not closed, the outboard motor will tilt up when operated in reverse.

Check that nobody is under the outboard motor before opening the manual relief valve. If the manual relief valve is loosened (turned counterclockwise) when the outboard motor is tilted up, the outboard motor will suddenly tilt down.

THE IMPORTANCE OF MAINTENANCE

Proper maintenance is essential for safe, economical, and trouble-free operation. It will also help reduce air pollution.

⚠ WARNING

Improperly maintaining this outboard motor or failure to correct a problem before operation can cause a malfunction in which you could be seriously hurt or killed.

Always follow the inspection and maintenance recommendations and schedules in this Owner's Manual.

To help you properly care for your outboard motor, the following pages include a maintenance schedule, routine inspection procedures, and simple maintenance procedures using basic hand tools. Other service tasks that are more difficult or require special tools are best handled by professionals and are normally performed by a Honda technician or other qualified mechanic.

The maintenance schedule applies to normal operating conditions. If you operate your outboard motor under unusual conditions, consult an authorized Honda Marine dealer for recommendations applicable to your individual needs and use.

Remember that your authorized Honda Marine dealer knows your outboard motor best and is fully equipped to maintain and repair it.

To ensure the best quality and reliability, use only new, Honda Genuine parts or their equivalents for repair and replacement.

Maintenance, replacement, or repair of the emission control devices and systems may be performed by any marine engine repair establishment or individual, using parts that are "certified" to EPA standards.

MAINTENANCE SAFETY

Some of the most important safety precautions follow. However, we cannot warn you of every conceivable hazard that can arise in performing maintenance. Only you can decide whether or not you should perform a given task.

⚠ WARNING

Failure to properly follow maintenance instructions and precautions can cause you to be seriously hurt or killed.

Always follow the procedures and precautions in the Owner's Manual.

Safety Precautions

- Make sure the engine is off before you begin any maintenance or repairs. This will eliminate several potential hazards:

  — **Carbon monoxide poisoning from engine exhaust.**
  Do not start or run the engine in a confined or partly enclosed area.

  — **Burns from hot parts.**
  Let the engine and exhaust system cool before touching.

  — **Injury from moving parts.**
  Do not run the engine unless instructed to do so.

- Read the instructions before you begin, and make sure you have the tools and skills required.
- To reduce the possibility of fire or explosion, be careful when working around gasoline. Use only a nonflammable solvent, not gasoline, to clean parts. Keep cigarettes, sparks, and flames away from all fuel-related parts.
- Wear gloves when handling the propeller to protect your hands from sharp edges.

SPARE SWITCH CLIP (long tiller handle type) AND EMERGENCY STARTER ROPE

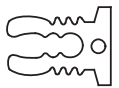

SPARE SWITCH CLIP (long tiller handle type)

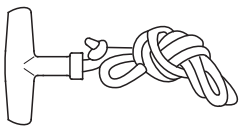

EMERGENCY STARTER ROPE

Always carry the spare switch clip and the emergency starter rope onboard. The spare clip may either be stored in the tool bag or in an easily accessible location on the boat along with the emergency starter rope.

TOOL KIT

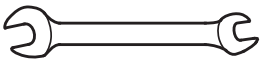

8 × 10 mm WRENCH

18 × 19 mm SOCKET WRENCH

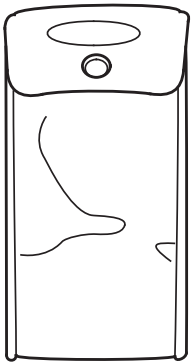

TOOL BAG

FLAT SCREWDRIVER

GRIP

Individual items in the tool kit shown above can be purchased from an authorized Honda Marine dealer and may be used for simple maintenance procedures and/or emergency repairs. Keep this tool kit or an equivalent onboard, so that they will always be available if you need them.

If your tool kit needs replacement, it is not available as a kit and each item must be ordered individually.

MAINTENANCE SCHEDULE

Follow the MAINTENANCE SCHEDULE table and service your outboard motor accordingly. Please note, a claim for warranty coverage will not be denied simply because the maintenance schedule for your outboard motor was not followed. However, any part(s) that fails specifically due to lack of maintenance, or improperly performed maintenance, would not be covered under the *Distributor's Limited Warranty.*

REGULAR SERVICE PERIOD (3) Perform at every indicated month or operating hour interval, whichever comes first. / ITEM		Each use	After use	First month or 20 hrs.	Every 6 months or 100 hrs.	Every year or 200 hrs.	Every 2 years or 400 hrs.
Engine oil	Check level	o					
	Change			o	o		
Gear case oil	Change			o (2)	o (2)		
Engine oil filter	Replace					o (2)	
Timing belt	Check-adjust					o (2)	
Carburetor linkage	Check-adjust			o (2)	o (2)		
Idle speed	Check-adjust			o (2)	o (2)		
Valve clearance	Check-adjust					o (2)	
Spark plug	Check-adjust/Replace				o		
Propeller and cotter pin	Check	o					
Fuel tank and tank filter	Clean					o	
Thermostat	Check					o (2)	
Lubrication	Grease			o (1)	o (1)		
Anode metal	Check outside engine	o					

(1) Lubricate more frequently when used in salt water.
(2) These items should be serviced by your servicing dealer, unless you have the proper tools and are mechanically proficient. Refer to the Honda shop manual for service procedures.
(3) For professional commercial use, log hours of operation to determine proper maintenance intervals.

ITEM / REGULAR SERVICE PERIOD (3) Perform at every indicated month or operating hour interval, whichever comes first.		Each use	After use	First month or 20 hrs.	Every 6 months or 100 hrs.	Every year or 200 hrs.	Every 2 years or 400 hrs.
Anode metal	Check inside engine						o (2) (6)
Fuel filter	Check				o		
	Replace						o
Fuel line	Check	o (7)					
	Replace	Every 2 years (If necessary) (2) (8)					
Battery and cable connection	Check level-tightness	o					
Bolts and nuts	Check-tightness			o(2)	o (2)		
Crankcase breather tube	Check					o (2)	
Cooling water passages	Clean		o (4)				
Water pump	Check					o (2)	
Emergency stop switch	Check	o					
Engine oil leak	Check	o					
Each operation part	Check	o					
Engine condition (5)	Check	o					
Power trim/tilt	Check				o (2)		
Shift Cable	Check-adjust				o (2)		

(1) Lubricate more frequently when used in salt water.
(2) These items should be serviced by your servicing dealer, unless you have the proper tools and are mechanically proficient. Refer to the Honda shop manual for service procedures.
(3) For professional commercial use, log hours of operation to determine proper maintenance intervals.
(4) When operating in salt water, turbid or muddy water, the engine should be flushed with clean water after each use.
(5) Upon starting, check for unusual engine sounds and cooling water flowing freely from the check hole.
(6) Replace the anodes when they have been reduced to about one third their original size, or if they are crumbling.
(7) Check the fuel line for leaks, cracks or damage. If it is leaking, cracked or damaged, take it to your servicing dealer for replacement before using your outboard.
(8) Check the fuel line for leaks, cracks, or damage. Replace the fuel line if there are signs of leaks, cracks or damage.

TRIM TAB ADJUSTMENT

The trim tab compensates for ‘‘torque steer,’’ which is a reaction of the outboard motor to propeller rotation.

If uncompensated, torque steer would make the outboard motor tend to turn to one side.

When the trim tab is correctly adjusted, steering effort is equal in either direction.

If steering effort is unequal, loosen the trim tab bolt and adjust the angle of the trim tab. Retighten the trim tab bolt securely.

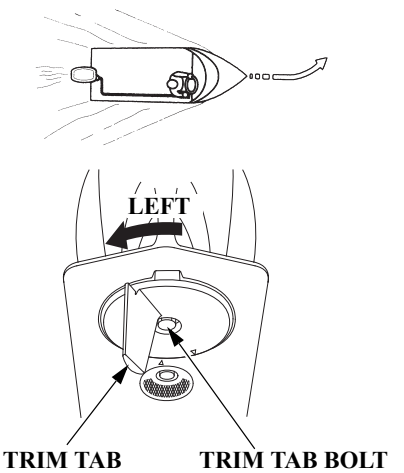

If less effort is required to make left turns, move the back of the trim tab left.

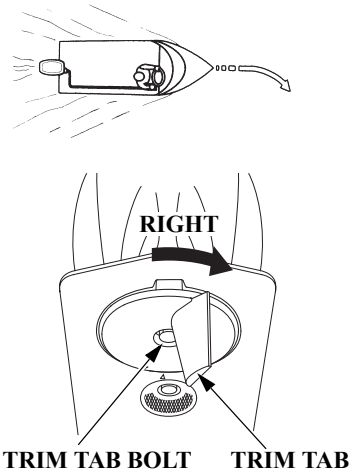

If less effort is required to make right turns, move the back of the trim tab right.

Adjust the trim tab in small increments, and retest steering effort with the boat evenly loaded and running at cruising speed.

MANUAL RELIEF VALVE

SRT and LRT Types

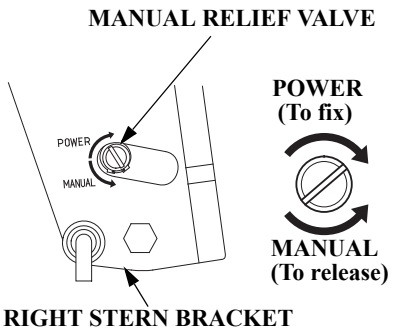

The outboard motor can be tilted manually after opening the manual relief valve. This feature enables the outboard motor to be tilted when no battery is connected.

For manual tilting, use a flat blade screwdriver to turn the valve counterclockwise 2 and a half turns. Close the valve firmly after positioning the engine.

Be sure the valve is closed before operating the outboard motor. If the valve is not closed, the outboard motor will tilt up when operated in reverse.

ENGINE COVER REMOVAL AND INSTALLATION

(REAR)

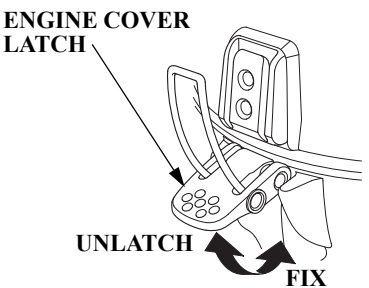

(FRONT)

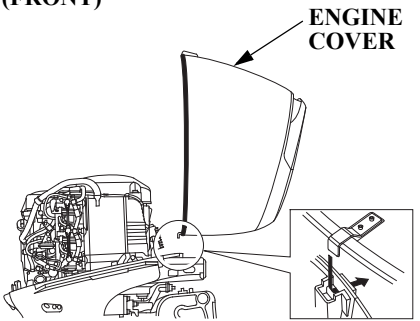

The engine cover latch fastens the engine cover to the outboard motor.

To remove the engine cover, unlatch the engine cover latch, then lift the engine cover off the outboard motor.

To install the engine cover, place the cover on the outboard motor, then latch the engine cover latch securely.

Engine Oil Level Check

Check the engine oil level with the engine stopped and the outboard motor in the vertical position.

1. Unlatch and remove the engine cover (p. 71).
2. Remove the oil level dipstick and wipe it clean.

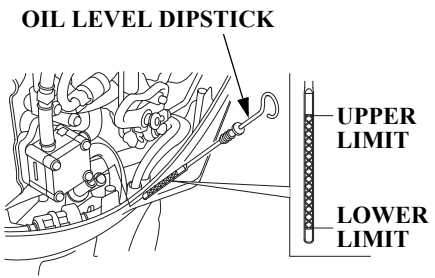

3. Insert the dipstick all the way in, then remove it and check the oil level shown on the dipstick.

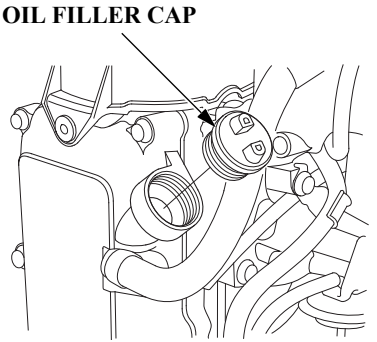

4. If the oil level is low, remove the oil filler cap, and add oil to reach the upper limit mark shown on the dipstick. Use the oil recommended on p. 75.

NOTICE

- *Running the engine with a low oil level can cause engine damage.*
- *Do not overfill. Overfilling the engine will cause it to smoke or have oil leaks.*

5. Install the oil filler cap and tighten it securely.
6. Install and lock the engine cover.

When you check the oil level with the dipstick, you might notice the engine oil appears milky or the oil level has increased. If you notice either condition, change the engine oil. See the following table for an explanation of these conditions.

Operating Method	Result	Effect
Running the engine below 3,000 rpm for more than 30% of the time so the engine does not warm up.	• Water condenses in the engine and mixes with the oil, resulting in a milky appearance.	The engine oil deteriorates, becomes less efficient as a lubricant, and causes an engine malfunction.
Frequent starting and stopping without allowing the engine to warm up.	• Unburned fuel mixes with the oil, increasing the volume of oil.	

Engine Oil Change

An engine oil evacuation device may be used to remove the engine oil.

Drain the used oil while the engine is warm. Warm oil drains quickly and completely.

1. Unlatch and remove the engine cover (p. 71). Remove the oil filler cap (p. 72).

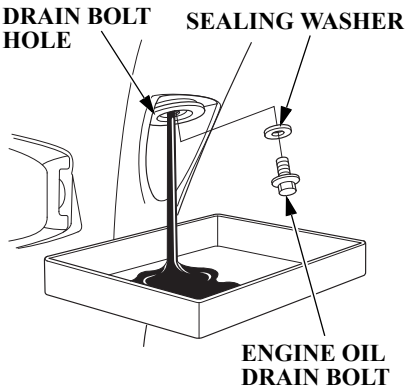

2. Place a suitable container below the drain bolt hole to catch the used oil, and then remove the engine oil drain bolt, and sealing washer.

3. Allow the used oil to drain completely, then install a new sealing washer on the engine oil drain bolt, and tighten it securely.

DRAIN BOLT TIGHTENING TORQUE:
17 lbf·ft (23 N·m , 2.3 kgf·m)

NOTICE

Improper disposal of engine oil can be harmful to the environment. If you change your own oil, please dispose of the used oil properly. Put it in a sealed container, and take it to a recycling center. Do not throw it in the trash, pour it on the ground or down a drain.

4. With the outboard motor in a vertical position, fill to the upper limit mark on the oil level dipstick (p. 72) with the recommended oil.

   Engine oil refill capacity:
   Without oil filter change:
   1.7 US qt (1.6 L)
   With oil filter change:
   1.8 US qt (1.7 L)

5. Install the oil filler cap and tighten it securely.

6. Install and lock the engine cover.

Engine Oil Recommendations

Oil is a major factor affecting performance and service life.

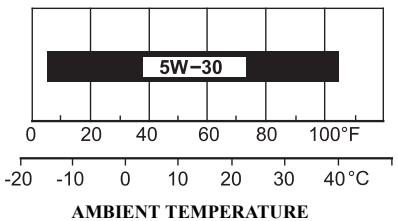

SAE 5W-30 is recommended for general use.

Honda recommends that you use API service category SG, SH or SJ oil. The SAE oil viscosity and service category are in the API label on the oil container.

Lubrication Points

Apply Honda Marine waterproof grease to the parts shown below:

Lubrication interval:
After the first 20 hours or 1 month, then every 100 hours or 6 months (refer to the maintenance schedule on page 68).

NOTICE

To prevent corrosion, apply anticorrosion oil to pivot surfaces where grease cannot penetrate.

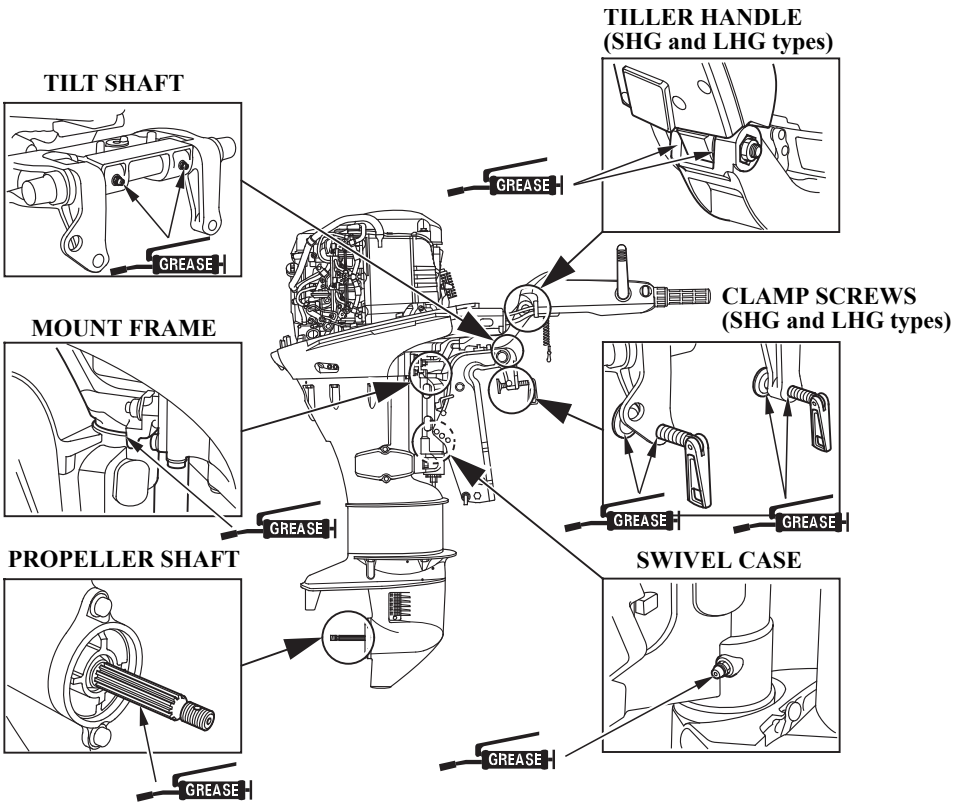

Apply Honda Marine Corrosion Inhibitor (or equivalent) to all areas under the engine cover and any exposed metal surfaces except the belts.

Spark Plug Service

RECOMMENDED SPARK PLUGS:
DR7EA (NGK)
X22ESR-U (DENSO)

NOTICE

Incorrect spark plugs can cause engine damage.

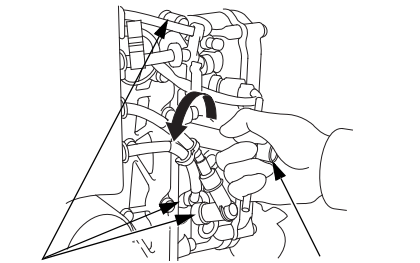

1. Unlatch and remove the engine cover (p. 71).
2. Disconnect the spark plug caps from the spark plugs.
3. Remove the spark plugs with a spark plug wrench.

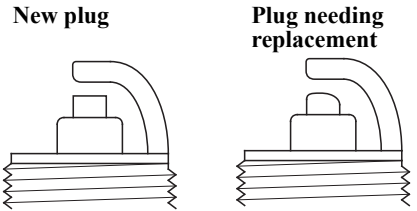

4. Inspect the spark plugs. Replace them if the electrodes are worn, or if the insulators are cracked or chipped.

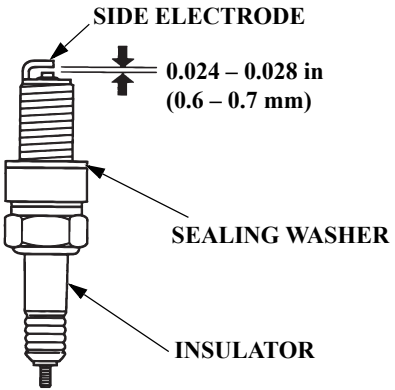

5. Measure the spark plug electrode gap with a wire-type feeler gauge. Correct the gap, if necessary, by carefully bending the side electrode.

   The gap should be:
   0.024 – 0.028 in (0.6 – 0.7 mm)

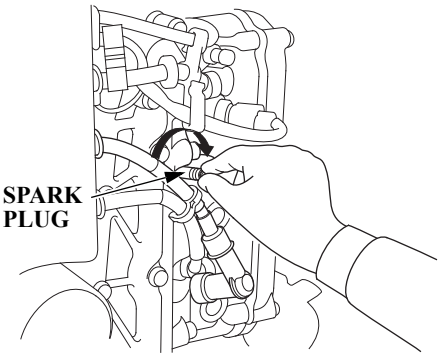

6. Install the spark plugs carefully, by hand, to avoid cross-threading.

7. After each spark plug seats, tighten with a spark plug wrench to compress the sealing washer.

   If reinstalling used spark plugs, tighten 1/8 – 1/4 turn after the spark plugs seat.

   If installing new spark plugs, tighten 1/2 turn after the spark plugs seat.

   SPARK PLUG TORQUE:
   13 lbf·ft (18 N·m , 1.8 kgf·m)

   NOTICE

   Loose spark plugs can overheat and damage the engine. Overtightening the spark plugs can damage the threads in the cylinder head.

8. Attach the spark plug caps.

9. Install and lock the engine cover.

REFUELING

If you do not anticipate cycling through at least one complete tank of fuel within a 30 day period, we recommend adding Honda Marine Fuel Stabilizer each time you refuel.

Portable Fuel Tank [standard equipment (Canadian types)] [optional equipment (American types)]

FUEL TANK CAPACITY:
6.6 US gal (25 L)

Check the fuel gauge and refill the tank when necessary.

Remove the fuel tank from the boat for refueling.

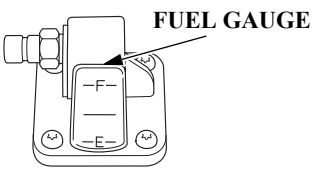

1. Turn the vent knob counterclockwise to the OPEN position.

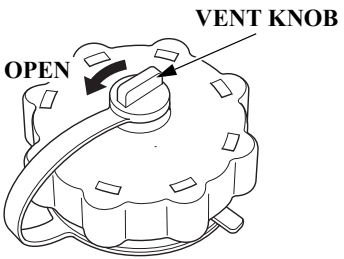

2. Turn the fuel filler cap counterclockwise so that it touches the pressure relief tab.

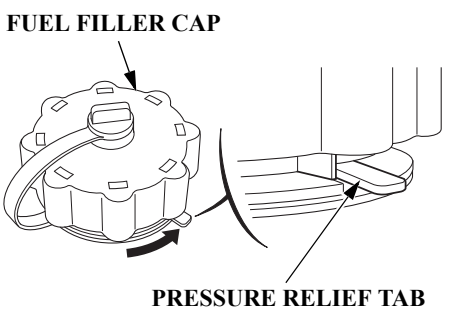

3. Press down the pressure relief tab, and then turn the fuel filler cap 1/4 counterclockwise. Release the pressure relief tab. Wait to relieve pressure.

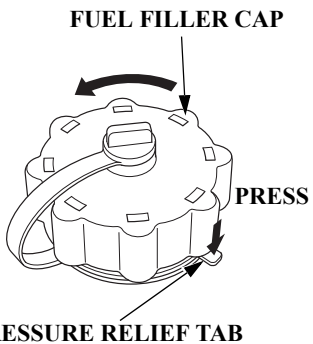

4. The fuel filler cap will lock again. Press down the pressure relief tab, and turn counterclockwise to remove the fuel filler cap.

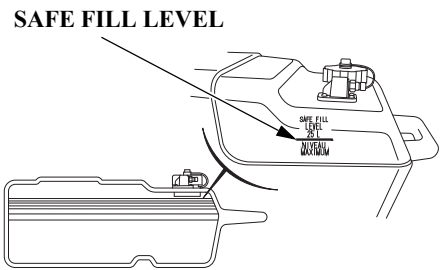

Refuel in a well-ventilated area. Fill the tank to the SAFE FILL LEVEL line.

After refueling, install the cap and tighten it until you hear it click. Turn the vent knob clockwise to the CLOSED position, and return the fuel tank to the boat.

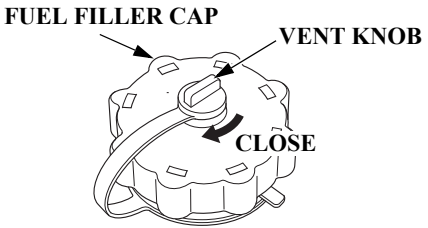

Using the fuel tank mounted in the boat.

Check the fuel level and refill if necessary. Do not fill the fuel tank above the UPPER LIMIT. Refer to the boat manufacturer's instructions.

NOTICE

Fuel can damage paint and plastic. Be careful not to spill fuel when filling your fuel tank. Damage caused by spilled fuel is not covered under warranty.

⚠ WARNING

Gasoline is highly flammable and explosive, and you can be burned or seriously injured when handling fuel.

- Stop the engine and let it cool before handling fuel.
- Keep heat, sparks, and flame away.
- Handle fuel only outdoors.
- Wipe up spills immediately.

Never refill the fuel tank inside a building where gasoline fumes may reach flames or sparks. Keep gasoline away from appliance pilot lights, barbecues, electric appliances, power tools, etc.

Spilled fuel is not only a fire hazard, it causes environmental damage. Wipe up spills immediately.

FUEL RECOMMENDATIONS

This engine is certified to operate on unleaded gasoline with a pump octane rating of 86 or higher.

You may use unleaded gasoline containing no more than 10% ethanol (E10) or 5% methanol by volume. In addition, methanol must contain cosolvents and corrosion inhibitors. Use of fuels with content of ethanol or methanol greater than shown above may cause starting and/or performance problems. It may also damage metal, rubber, and plastic parts of the fuel system.
Engine damage or performance problems that result from using a fuel with percentages of ethanol or methanol greater than shown above are not covered under warranty.

Never use stale or contaminated gasoline or an oil/gasoline mixture. Avoid getting dirt or water in the fuel tank.

If your outboard motor will be used on an infrequent or intermittent basis, please refer to the fuel section of the *STORAGE* chapter (p. 91) for additional information regarding fuel deterioration.

Fuel Filter Inspection and Replacement

The fuel filter is located under the engine cover between the fuel coupling and the fuel pump.

Water or sediment accumulation in the filter can cause loss of power or hard starting. To prevent engine malfunction, inspect the filter and replace when necessary.

⚠ WARNING

Gasoline is highly flammable and explosive, and you can be burned or seriously injured when handling fuel.

- Stop the engine and let it cool before handling fuel.
- Keep heat, sparks, and flame away.
- Handle fuel only outdoors.
- Wipe up spills immediately.

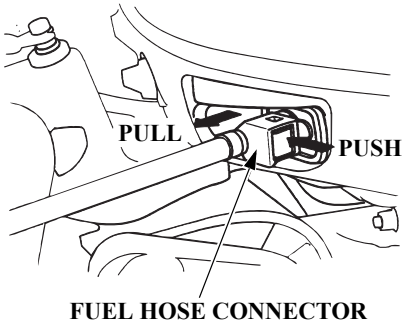

1. Disconnect the fuel hose connector from the outboard motor.
2. Remove the engine cover (p. 71).

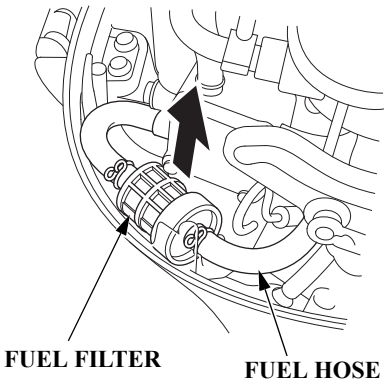

3. Raise the fuel filter, and take the filter out of the engine under case without disconnecting the fuel hoses.

4. Inspect the filter for water and/or sediment accumulation.

   If the filter is OK, reinstall it. If water and/or sediment are present, replace the filter as described in the following steps. Always replace the filter at the scheduled replacement interval (p. 69).

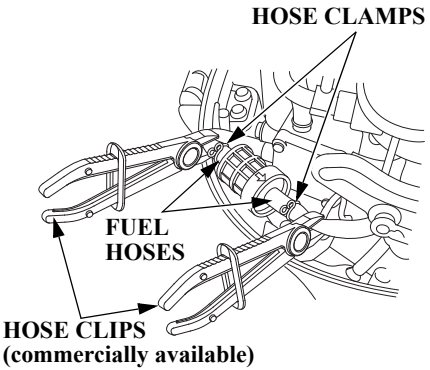

5. Place commercially available hose clips on the fuel hoses on each side of the filter to prevent fuel leakage when the fuel hoses are disconnected.

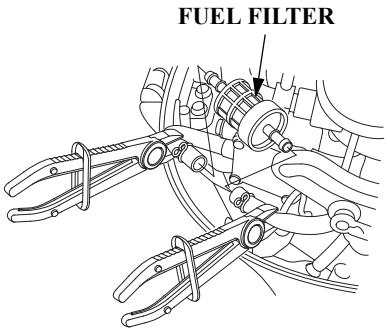

6. Remove the fuel filter from the fuel hoses.

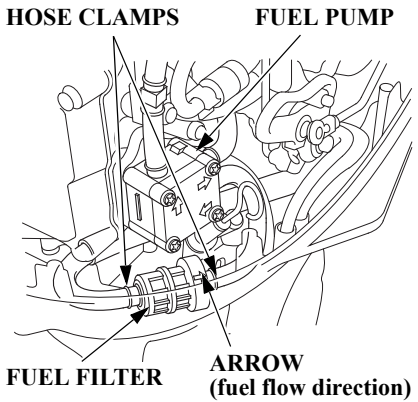

7. Install the new fuel filter so the arrow on the filter points toward the fuel pump.

   Fuel flow will be reduced if the filter is installed backward.

8. Connect the fuel hoses to the fuel filter securely with the hose clamps. Remove the fuel hose clips used to close the fuel hoses.

9. Securely connect the fuel hose connector to the outboard motor (p. 45).

10. Prime the engine using the priming bulb (p. 46). Check for fuel leaks. Repair any fuel leaks if necessary.

11. Reinstall the engine cover (p. 71).

If loss of power or hard starting are found to be caused by excessive water or sediment accumulation in the fuel filter, inspect the fuel tank.

Clean the fuel tank and tank filter if necessary. It may be necessary to drain the fuel tank completely and refill with fresh gasoline.

Portable Fuel Tank and Tank Filter Cleaning [standard equipment (Canadian types)] [optional equipment (American types)]

⚠ WARNING

Gasoline is highly flammable and explosive, and you can be burned or seriously injured when handling fuel.

- Stop the engine and let it cool before handling fuel.
- Keep heat, sparks, and flame away.
- Handle fuel only outdoors.
- Wipe up spills immediately.

Fuel Tank

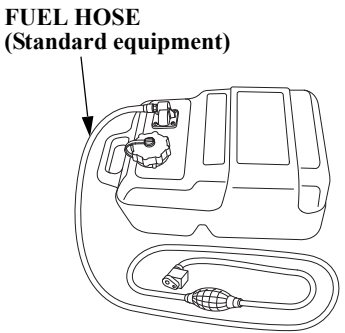

Empty the portable fuel tank into an approved gasoline container. Use a funnel to avoid spilling fuel. Rinse the fuel tank with nonflammable solvent to remove any accumulated sediment.

Fuel Tank Filter

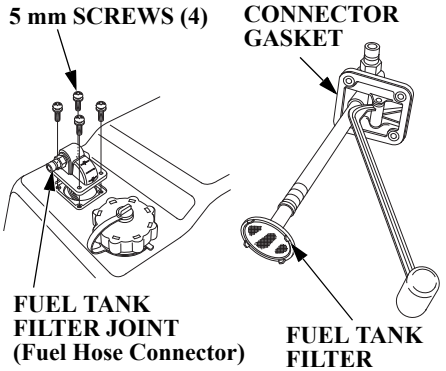

1. Remove the four 5 mm screws using a flat screwdriver, then remove the fuel hose connector and fuel tank filter from the tank.

2. Clean the filter in nonflammable solvent. Inspect the fuel tank filter and the connector gasket. Replace them if damaged.

3. Reinstall the filter and hose connector in the fuel tank. Tighten the four 5 mm screws securely.

Anode Replacement

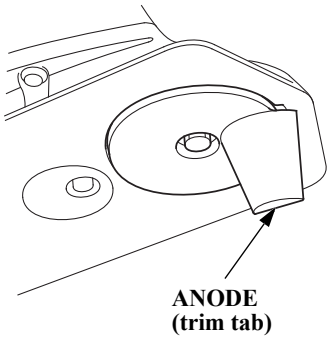

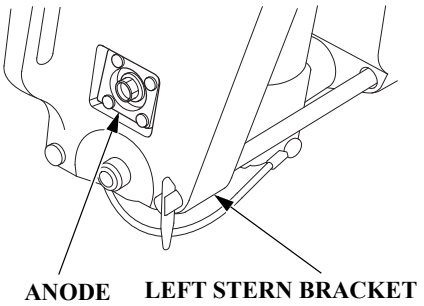

There are two anodes. One anode is located on the left stern bracket and the other anode is on the trim tab. They are made of a sacrificial material that helps to protect the outboard motor from corrosion.

Replace the anodes when they have been reduced to about half their original size, or if they are crumbling.

NOTICE

Painting or coating the anodes will defeat their purpose and will lead to rust and corrosion damage to the outboard motor. The anodes must be exposed to the water in order to protect the outboard motor.

Propeller Replacement

Before replacing the propeller, remove the emergency stop switch clip from the emergency stop switch to prevent any possibility of the engine being started while you are working with the propeller.

The propeller blades may have sharp edges, so wear heavy gloves to protect your hands.

Operating the outboard motor at higher altitudes will reduce available power. This may require decreasing the propeller pitch to maintain correct engine RPM.

Removal

1. Remove the cotter pin, unscrew the castle nut, remove the plain washer, then remove the propeller and thrust washer.
2. Inspect the propeller shaft for any fishing line or debris.

Installation

1. Apply marine grade grease to the propeller shaft.
2. Install the thrust washer with the grooved side toward the gear case.
3. Install the propeller and the plain washer.
4. Lightly tighten the castle nut by hand or wrench until the propeller has no free play.
5. Tighten the castle nut using a torque wrench.
   CASTLE NUT TIGHTENING TORQUE:
   0.7 lbf·ft (1 N·m, 0.1 kgf·m)
6. Then, using a torque wrench, tighten the castle nut until the first available groove in the castle nut aligns with the cotter pin hole. Do not tighten past the first alignment of the castle nut groove and the cotter pin hole.

NOTICE

TIGHTENING TORQUE LIMIT:
25 lbf·ft (34 N·m, 3.5 kgf·m)
Do not tighten the castle nut above the TIGHTENING TORQUE LIMIT, or the propeller and shaft may be damaged.

7. Be sure to replace the cotter pin with a new one.

   • Use a Honda Genuine stainless steel cotter pin or equivalent cotter pin and bend the pin ends as shown.

Note that these wrenches are not included with the tool set that comes with the outboard motor. Contact your authorized Honda Marine dealer for additional tool information.

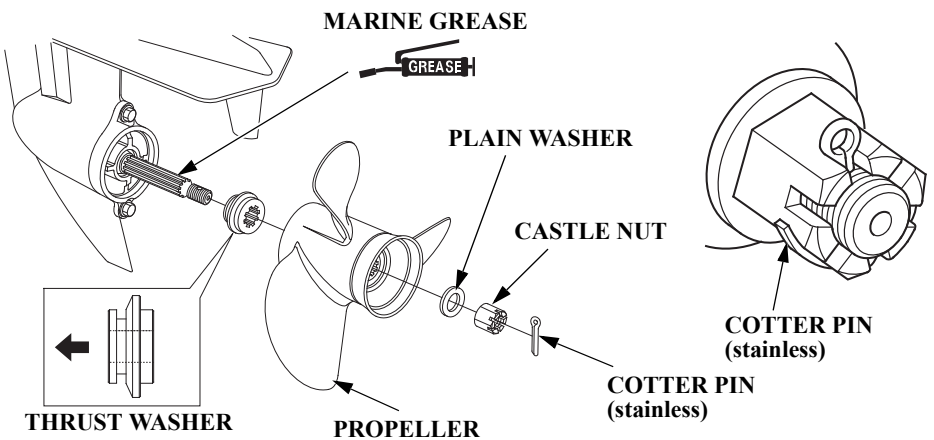

CLEANING AND FLUSHING

Cleaning and Flushing

After each use in salt water or dirty water, thoroughly clean and rinse the outboard motor with fresh water.

Touch up any damaged paint, and coat areas that may rust with Honda Corrosion Inhibitor, or equivalent. Lubricate controls with a silicone spray lubricant.

NOTICE

Do not apply water or corrosion inhibitor directly to the timing belt under the engine cover. If water or corrosion inhibitor penetrates the timing belt, it may be damaged. Before applying a corrosion inhibitor, cover the timing belt with a protective material to prevent damage.

Cleaning

Wash the outside of the outboard motor with clean, fresh water, and flush the cooling system as described.

Flushing With the Honda Garden Hose Adapter (optional equipment)

It is necessary to run the engine during the flushing procedure. For safety, remove the propeller from the outboard motor (p. 86).

1. Tilt down the outboard motor.

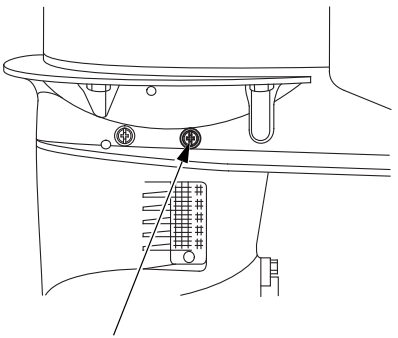

WASH SCREW (flush screw)

2. Remove the wash screw and sealing washer from the WASH screw hole in the gear case. Be sure not to remove the oil level screw from the OIL LEVEL screw hole in the gear case.

WATER INTAKES

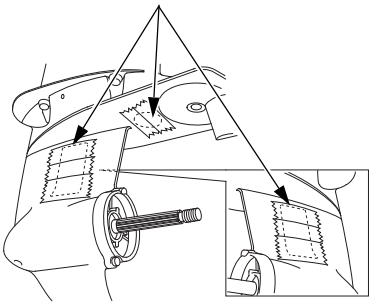

3. Cover the three water intakes with duct tape as shown above.

GARDEN HOSE ADAPTER (FLUSH KIT COUPLER)

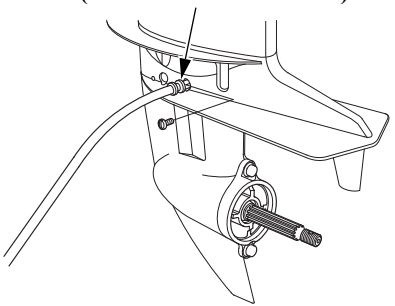

4. Remove the sealing washer from the wash screw and install the sealing washer on the flush kit coupler.
5. Install the flush kit coupler into the WASH screw hole and connect a fresh water hose to the garden hose adapter.
6. Move the gearshift lever or control lever to the N (neutral) position. Flush the outboard motor in the neutral position only.
7. Turn on the fresh water supply to the flush kit coupler.

NOTICE

Running the engine without good water circulation can cause overheating and water pump damage.

Damage caused by running the outboard motor without sufficient cooling water is not covered by the *Distributor's Limited Warranty* (p. 121).

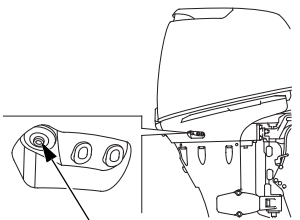

COOLING SYSTEM INDICATOR

8. Start the engine. Monitor the cooling system indicator. Stop the engine if water does not come out of the cooling system indicator and check the fresh water supply.

9. Allow the engine to run at idle for at least 5 minutes to clean the inside of the outboard motor.

10. Stop the engine, and disconnect the fuel hose from the outboard motor. Remove the garden hose adapter.

11. Remove the sealing washer from the garden hose adapter and install the sealing washer on the wash screw.

    If tape was used to cover the three water intakes in step 3, remove the tape now.

12. Install the wash screw into the gear case securely.

13. Tilt up the outboard motor and move the tilt lock lever to the LOCK position.

Flushing Without the Honda Garden Hose Adapter

It is necessary to run the engine during the flushing procedure. For safety, remove the propeller from the outboard motor (p. 86).

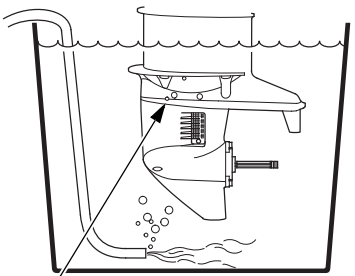

ANTIVENTILATION PLATE

1. Tilt down the outboard motor.

2. Place a container under the outboard motor, and fill it with clean, fresh water. The water level must be at least 2 inches (5 cm) above the antiventilation plate.

NOTICE

Running the engine without good water circulation can cause overheating and water pump damage.

Damage caused by running the outboard motor without sufficient cooling water is not covered by the *Distributor's Limited Warranty* (p. 121).

3. Start the engine and run in the N (neutral) position at low speed for at least 10 minutes.

4. After flushing, stop the engine, and disconnect the fuel hose from the outboard motor. Remove the water container, and reinstall the propeller (p. 86).

5. Tilt up the outboard motor and move the tilt lock lever to the LOCK position.

Fuel

NOTICE

Depending on the region where you operate your outboard, fuel formulations may deteriorate and oxidize rapidly. Fuel deterioration and oxidation can occur in as little as 15 days and may cause damage to the carburetors and fuel system. Please check with your servicing dealer for local storage recommendations.

Gasoline will oxidize and deteriorate in storage. Deteriorated gasoline will cause hard starting, and it leaves gum deposits that clog the fuel system. If the gasoline in your fuel tank and carburetor deteriorates during storage, you may need to have the carburetor and other fuel system components serviced or replaced.

The length of time that gasoline can be left in your fuel tank and carburetor without causing functional problems will vary with such factors as gasoline blend, your storage temperatures, and whether the fuel tank is partially or completely filled. The air in a partially filled fuel tank promotes fuel deterioration. Very warm storage temperatures accelerate fuel deterioration. Fuel deterioration problems may occur in less than 15 days, if the gasoline was not fresh when you filled the fuel tank.

You can extend fuel storage life by adding a gasoline stabilizer that is formulated for that purpose, or you can avoid fuel deterioration problems by draining all the fuel from the fuel tank and carburetors.

The *Distributor's Limited Warranty* (p. 121) does not cover fuel system damage or engine performance problems resulting from neglected storage preparation. See page 81 for additional information on fuel recommendations.

Adding a Fuel Stabilizer

When adding a fuel stabilizer, fill the fuel tank with fresh gasoline. If only partially filled, air in the tank will promote fuel deterioration during storage. If you keep an additional container of gasoline for refueling, be sure that it contains only fresh gasoline.

1. Add Honda Marine fuel stabilizer following the instructions on the label.

2. After adding a fuel stabilizer, run the engine in water for 10 minutes to be sure that the treated gasoline has replaced the untreated gasoline in the carburetors.

3. Turn the engine OFF.

Draining the Fuel System

You can avoid fuel deterioration problems by draining the fuel tank and carburetors.

1. Disconnect the fuel hose connector from the outboard motor (p. 82).

2. Remove the engine cover (p. 71).

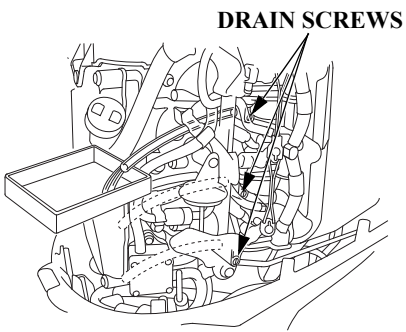

3. With the outboard motor in a vertical position, place an approved gasoline container below the fuel drain outlet, and use a funnel to avoid spilling fuel.

⚠WARNING

Gasoline is highly flammable and explosive, and you can be burned or seriously injured when handling fuel.

- Stop the engine and let it cool before handling fuel.
- Keep heat, sparks, and flame away.
- Handle fuel only outdoors.
- Wipe up spills immediately.

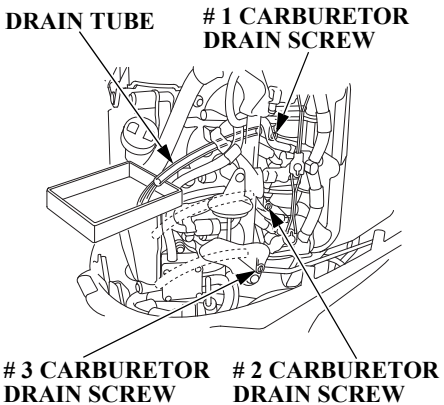

4. Loosen the drain screw on # 1 carburetor, allow the carburetor to drain completely, then tighten the drain screw securely.

5. Remove the drain tube from # 1 carburetor, install it on # 2 carburetor, and drain that carburetor in the same manner.

6. Repeat this procedure to drain # 3 carburetor.

7. After all three carburetors are drained, reinstall the drain tube on # 1 carburetor.

8. Reinstall the engine cover (p. 71).

9. Drain the fuel tank into an approved gasoline container, or if you need to store fuel in the fuel tank, you can extend fuel storage life by filling the fuel tank with fresh gasoline and adding Honda Marine fuel stabilizer following the directions on the container. Close the fuel cap vent.

   If using the portable fuel tank, close the fuel filler cap vent knob. Store the portable fuel tank in a cool dry place out of direct sunlight.

Engine Oil

1. Change the engine oil (p. 73).

2. Remove the spark plugs (p. 77), and remove the emergency stop switch clip from the emergency stop switch.

3. Pour 1 – 2 teaspoons (5 – 10 cm^3) of clean engine oil into each cylinder.

4. Using the emergency starter rope (p. 52), rotate the flywheel a few revolutions to distribute the oil in the cylinders.

5. Reinstall the spark plugs (p. 78).

STORAGE PRECAUTIONS

Select a well-ventilated storage area. If possible, avoid storage areas with high humidity.

If storing a container of gasoline, such as the portable fuel tank, store it away from any appliance that operates with a flame, such as a furnace, water heater, or clothes dryer. Also avoid any area with a spark producing electric motor, or where power tools are operated.

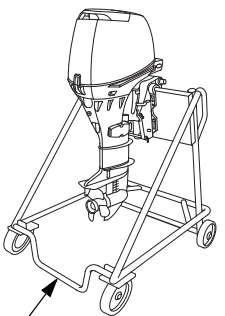

OUTBOARD MOTOR STAND (commercially available)

If the outboard motor will be removed from the boat for storage, we recommend storing it vertically by mounting it on a commercially available stand.

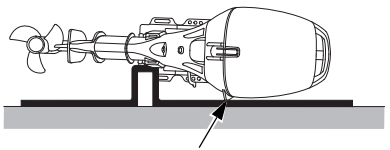

CASE PROTECTOR

If it is necessary to store the outboard motor horizontally, drain the carburetors (p. 92), and drain the engine oil (p. 73), before removing the outboard motor from the boat.

Position the outboard motor with its carburetor side down, and cushion it with protective packing material.

NOTICE

Any other horizontal storage position may cause damage to the outboard motor or oil leakage.

Cover the outboard motor to keep out dust. Do not use plastic sheet as a dust cover. A nonporous cover will trap moisture, promoting rust and corrosion.

REMOVAL FROM STORAGE

Check your outboard motor as described in the *BEFORE OPERATION* chapter of this manual.

If the cylinders were coated with oil during storage preparation, the engine may smoke briefly at startup. This is normal.

WITH OUTBOARD MOTOR INSTALLED ON BOAT

When trailering a boat with the outboard motor attached, always disconnect the fuel line from the portable fuel tank.

SHG and LHG Types (long tiller handle)

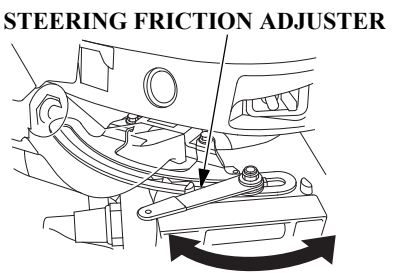

Tighten the steering friction adjuster to prevent the outboard motor from moving while trailering the boat.

LRG, SRT and LRT Types (remote control)

Use an outboard motor support bar to prevent the outboard motor from moving while trailering the boat. Refer to the manufacturer's instructions for using an outboard motor support bar.

All Types

The preferred method is to leave the engine in the normal running position, but if there is insufficient road clearance, you can tilt the outboard motor using a commercially available outboard motor support bar available through your dealer. Refer to the manufacturer's instructions for using an outboard motor support bar.

WITH OUTBOARD MOTOR REMOVED FROM BOAT

Secure the outboard motor in either the vertical or horizontal position shown on p. 93 and 94.

(Tiller handle type)

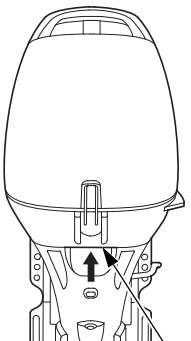

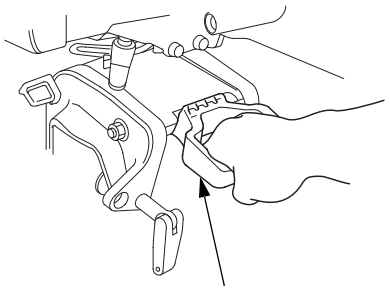

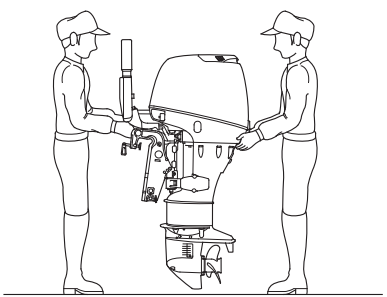

To carry, hold the outboard motor by the carrying handle, or hold by the carrying handle and the lug beneath the engine cover latch, as shown.

NOTICE

Lifting the outboard motor by the engine cover, or using the installed outboard motor as a handle or lever to move the boat, can damage the outboard motor.

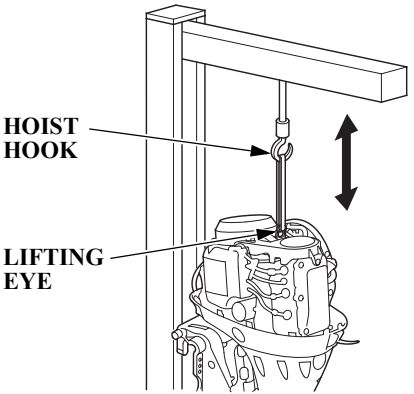

When transporting the outboard motor on a vehicle, perform the following.

1. Remove the engine cover, lift the outboard motor using the engine lifting eye, and place on the outboard motor stand (commercially available).

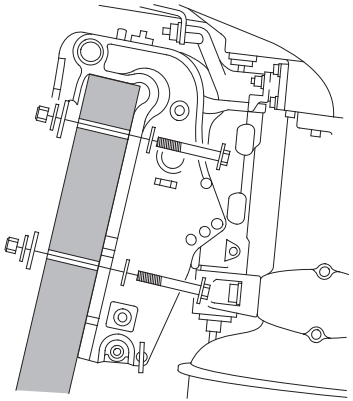

2. Secure the outboard motor with the bolts, nuts and washers.

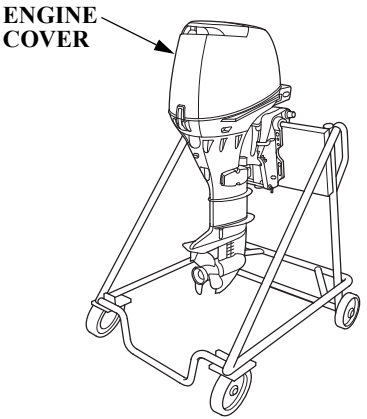

3. Reinstall the engine cover.

   When trailing or transporting the boat with the outboard motor attached, it is recommended that the outboard motor remain in normal running position, with the steering friction adjuster in the locked position (p. 95).

TAKING CARE OF UNEXPECTED PROBLEMS

ELECTRIC STARTER WILL NOT OPERATE

Possible Cause	Correction
Battery connections loose or corroded.	Clean and tighten battery connections.
Battery discharged.	Recharge battery.
Fuse burnt out.	Replace fuse (p. 103).
Starter malfunction, switch malfunction, or electrical problem in the starting circuit.	Use emergency starting procedure (p. 51), then take outboard motor to an authorized Honda Marine dealer, or refer to the shop manual.

ENGINE WILL NOT START

Possible Cause	Correction
Clip not inserted in emergency stop switch.	Insert clip in emergency stop switch.
Gearshift lever or control lever not in neutral position.	Shift to neutral (p. 47 or 49).
Throttle grip not in START position (long tiller handle type).	Turn throttle grip to START position (p. 47).
Fast idle lever raised (remote control/side-mount type).	Lower fast idle lever, if the engine is warm (p. 50).

ENGINE WILL NOT START

Possible Cause	Correction
Out of fuel.	Refuel (p. 79).
Fuel vent closed (portable fuel tank).	Open the vent knob (p. 33).
Fuel hose not primed.	Squeeze priming bulb (p. 46).
Fuel filter or fuel tank filter clogged.	Replace fuel filters (p. 82 and 85).
Bad fuel; outboard motor stored without treating or draining gasoline, or refueled with bad gasoline.	Drain fuel tank and carburetors (p. 92 and 93). Refill with fresh gasoline (p. 79).
Spark plugs faulty, fouled, or improperly gapped.	Gap or replace spark plugs (p. 77).
Spark plugs wet with fuel (flooded engine).	Dry and reinstall spark plugs. Start engine with the throttle open.
Carburetor malfunction, fuel pump failure, ignition malfunction, stuck valves, etc.	Take outboard motor to an authorized Honda Marine dealer, or refer to the shop manual.

HARD STARTING OR STALLS AFTER STARTING

Possible Cause	Correction
Throttle grip not in START position (long tiller handle type).	Turn throttle grip to START position (p. 47).
Fast idle lever raised (remote control/side-mount type).	Lower fast idle lever, unless engine is warm (p. 50).
Fuel vent closed (portable fuel tank).	Open the vent knob (p. 33).
Fuel hose not primed.	Squeeze priming bulb (p. 46).
Fuel filter or fuel tank filter clogged.	Replace fuel filters (p. 82 and 85).
Bad fuel; outboard motor stored without treating or draining gasoline, or refueled with bad fuel.	Drain fuel tank and carburetors (p. 92 and 93). Refill with fresh gasoline (p. 79).

HARD STARTING OR STALLS AFTER STARTING

Possible Cause	Correction
Spark plugs faulty, fouled, or improperly gapped.	Gap or replace spark plugs (p. 77).
Carburetor malfunction, fuel pump failure, ignition malfunction, etc.	Take outboard motor to an authorized Honda Marine dealer, or refer to the shop manual.

ENGINE OVERHEATS

Possible Cause	Correction
Water intake screens clogged.	Clean water intake screens.
Faulty thermostat or water pump.	Take outboard motor to an authorized Honda Marine dealer, or refer to the shop manual.

BATTERY WILL NOT CHARGE AND ELECTRIC STARTER WILL NOT OPERATE

The battery-charging circuit and the electric starter relay circuit are protected by the 15-ampere fuse. If the fuse burns out, the engine will not charge the battery, and the electric starter will not operate. The engine can be started using the emergency starter rope.

The ignition switch is protected by the 10-ampere fuse. If the fuse burns out, the engine will not start or run, and the power trim/tilt switch will not operate.

Fuse Replacement

1. With the engine stopped, remove the engine cover (p. 71).
2. Remove the fuse cover.
3. Remove and inspect the fuse. If a fuse is burnt out, install a replacement fuse of the specified rating. The outboard motor is supplied with a spare fuse in each fuse holder.

   DESIGNATED FUSE RATING:
   15A, 10A

NOTICE

Never use a fuse with a rating greater than specified. Serious damage to the electrical system could result.

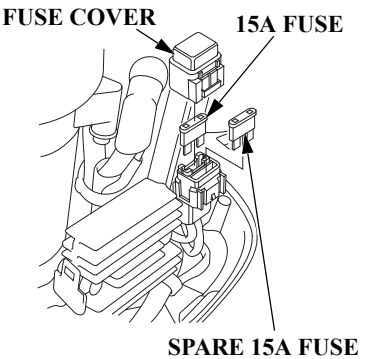

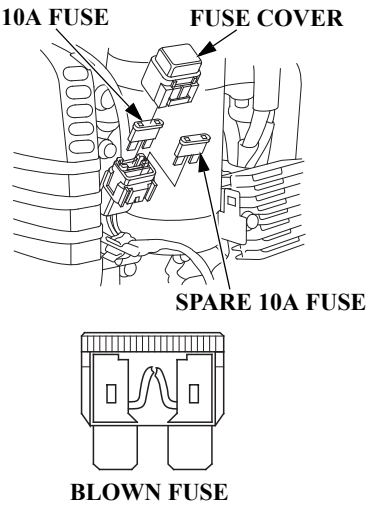

4. Reinstall the fuse cover and the engine cover.

Before further operation, try to determine and correct the electrical problem that caused the fuse to burn out. An uncorrected electrical problem may cause the fuse to burn out again.

OIL PRESSURE INDICATOR GOES OFF AND ENGINE SPEED IS LIMITED

SHG and LHG Types (long tiller handle)

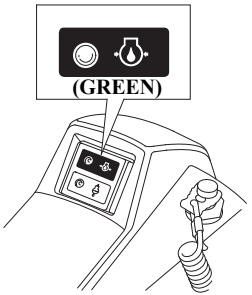

LRG, SRT and LRT Types [remote control (side-mount type)]

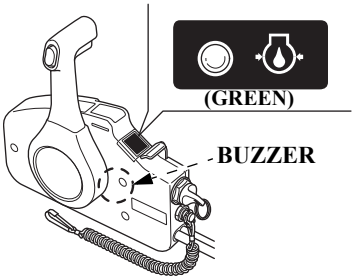

If oil pressure becomes low, the green indicator will go off, and the engine protection system will limit engine speed. If you are at cruising speed, engine speed will decrease automatically.

Remote control type is equipped with a buzzer that sounds continuously when the green indicator goes off. The buzzer sound stops below an engine speed of 1,400 rpm.

Low oil pressure may be the result of a low engine oil level, or there may be a problem with the engine lubrication system.

If the throttle is closed suddenly after full throttle operation, engine speed may drop below the specified idle rpm, and that could activate the engine protection system momentarily.

If low oil pressure activates the engine protection system, stop the engine, check the engine oil level (p. 72), and add oil if needed.

With the engine oil at the recommended level, restart the engine. If the lubrication system is OK, the green indicator light should come on within 30 seconds, and the engine will respond normally to throttle grip or control lever operation.

If the engine protection system remains activated after 30 seconds, return to the nearest boat landing, and have the outboard motor inspected by an authorized Honda Marine dealer.

OVERHEAT INDICATOR COMES ON AND ENGINE SPEED IS LIMITED

SHG and LHG Types (long tiller handle)

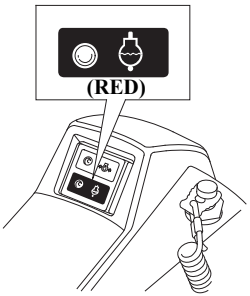

LRG, SRT and LRT Types [remote control (side-mount type)]

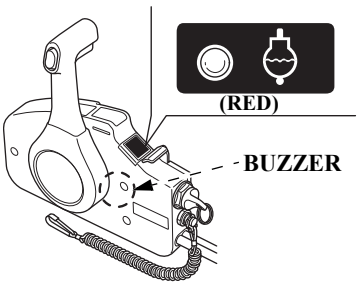

If the engine overheats, the red indicator will come on, and the engine protection system will limit engine speed. If you are at cruising speed, engine speed will decrease gradually.
When normal engine temperature is restored, the engine speed will gradually rise to normal engine speed.

If the condition persists for another 20 seconds, the engine will shut off.

Remote control types are equipped with a buzzer that sounds when the red indicator comes on.

Engine overheating may be the result of clogged water intake screens, or there may be a problem with the cooling system thermostat or water pump.

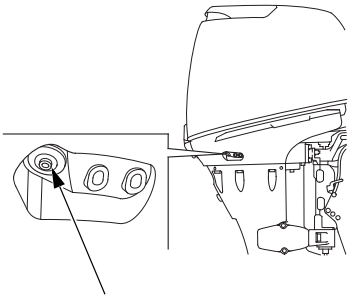

COOLING SYSTEM INDICATOR

If overheating activates the engine protection system, idle the engine in neutral, and check the cooling system indicator.

If water is flowing from the cooling system indicator, continue idling for 30 seconds. If the cooling system is OK, the red indicator should go off within 30 seconds, and the engine will respond normally to throttle grip or control lever operation.

If there is no water flowing from the cooling system indicator, stop the engine, and tilt the outboard motor to inspect the water intake screens. If clogged, clean the water intake screens, return the outboard motor to the running position, restart the engine, and check the cooling system indicator again.

If there is still no water flowing from the cooling system indicator, or if the engine protection system remains activated after 30 seconds, return to the nearest boat landing, and have the outboard motor inspected by an authorized Honda Marine dealer.

SUBMERGED OUTBOARD MOTOR

A submerged outboard motor must be serviced immediately after it is recovered from the water in order to minimize corrosion.

If there is a Honda Marine dealership nearby, take the outboard motor to the dealer immediately. If you are far from a dealer, proceed as follows:

1. Remove the engine cover, and rinse the outboard motor with fresh water to remove salt water, sand, mud, etc.

2. Drain the carburetors as described on p. 92.

3. Change the engine oil as described on p. 73 and 75. If there was water in the engine crankcase, or if the used engine oil showed signs of water contamination, then a second engine oil change should be performed after running the engine for half an hour.

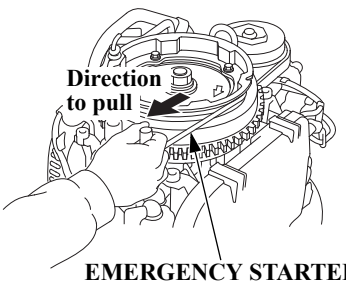

4. Remove the flywheel cover (p. 52). Remove the spark plugs (p. 77), and remove the clip from the emergency stop switch. Pull the emergency starter rope, rotate the flywheel a few revolutions to completely expel any water from the cylinders.

If the engine was running when it submerged, there may be mechanical damage, such as bent connecting rods. If the engine binds when cranked, do not attempt to run the engine until it has been repaired.

NOTICE

When cranking the engine with an open ignition circuit (spark plugs removed from the ignition circuit), remove the clip from the emergency stop switch to prevent possible damage to the ignition system.

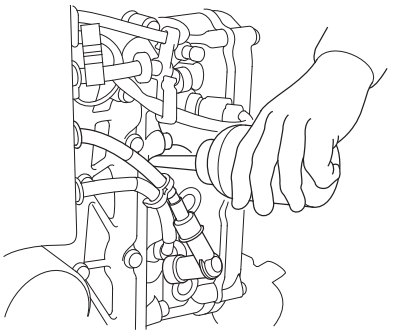

5. Pour a teaspoon of engine oil into each spark plug hole, and then pull the emergency starter rope several times to lubricate the inside of the cylinders.

6. Reinstall the spark plugs, and put the emergency stop switch clip into the emergency stop switch.

7. Attempt to start the engine.

   If the engine fails to start, remove the spark plugs, dry them, then reinstall the spark plugs and attempt to start the engine again.

   If the engine starts, and no mechanical damage is evident, continue to run the engine for a half hour or longer. Be sure the water level is at least 2 inches (5 cm) above the antiventilation plate to avoid overheating and water pump damage.

8. As soon as possible, take the outboard motor to an authorized Honda Marine dealer for inspection and service.

TECHNICAL INFORMATION

Serial Number Locations

Record the product identification number, the engine serial number, and the date of purchase in the space provided on this page. You will need these numbers when ordering parts, and when making technical or warranty inquiries (p. 118).

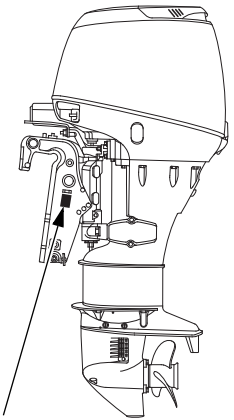

PRODUCT IDENTIFICATION NUMBER

The product identification number is stamped on a plate attached on the left side of the stern bracket.

Product identification number:

_____

Date of purchase:

_____

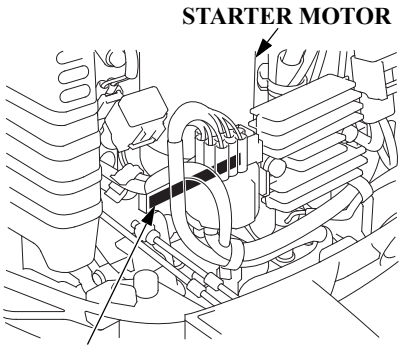

ENGINE SERIAL NUMBER

The engine serial number is stamped on the cylinder block under the starter motor which is located in the front of the engine.

Engine serial number:

_____

Carburetor Modification for High Altitude Operation

At altitudes above 3,000 feet (900 meters), the standard carburetor air-fuel mixture will be too rich. Performance will decrease, and fuel consumption will increase. A very rich mixture will also foul the spark plug and cause hard starting. Operation at an altitude that differs from that at which this engine was certified, for extended periods of time, may increase emissions.

High altitude operation can be improved by specific modifications to the carburetor. If you usually operate your outboard motor at 3,000 feet (900 meters) or above, consult with your authorized Honda Marine dealer.

Your dealer can determine the appropriate carburetor settings for the altitude at which you operate your outboard motor.

Even with carburetor modification, engine horsepower will decrease about 3.5% for each 1,000-foot (300-meter) increase in altitude. The effect of altitude on horsepower will be greater than this if no carburetor modification is made.

NOTICE

When the carburetor has been modified for high altitude operation, the air-fuel mixture will be too lean for low altitude use. Operation at altitudes below 3,000 feet (900 meters) with a modified carburetor may cause the engine to overheat and result in serious engine damage. For use at low altitudes, have an authorized Honda Marine dealer return the carburetor to original factory specifications.

Battery

For complete information, refer to the battery manufacturer's instructions.

Minimum Requirements

12V-52Ah/5HR (65Ah/20HR)
(CCA 420)

Emission Control System Information

Source of Emissions

The combustion process produces carbon monoxide, oxides of nitrogen, and hydrocarbons. Control of hydrocarbons and oxides of nitrogen is very important because, under certain conditions, they react to form photochemical smog when subjected to sunlight. Carbon monoxide does not react in the same way, but it is toxic.

Honda utilizes appropriate air/fuel ratios and other emissions control systems to reduce the emissions of carbon monoxide, oxides of nitrogen, and hydrocarbons.

The U.S., California Clean Air Acts, and Canadian Environmental Protection Act

EPA, California, and Canadian regulations require all manufacturers to furnish written instructions describing the operation and maintenance of emission control systems.

The following instructions and procedures must be followed in order to keep the emissions from your Honda engine within the emission standards.

Tampering and Altering

NOTICE

Tampering is a violation of Federal and California law.

Tampering with or altering the emission control system may increase emissions beyond the legal limit. Among those acts that constitute tampering are:

- Removal or alteration of any part of the intake, fuel, or exhaust systems.
- Alterations that would cause the engine to operate outside its design parameters.

Problems That May Affect Emissions

If you are aware of any of the following symptoms, have your engine inspected and repaired by your servicing dealer.

- Hard starting or stalling after starting
- Rough idle
- Misfiring or backfiring under load
- Afterburning (backfiring)
- Black exhaust smoke or high fuel consumption

Replacement Parts

The emission control systems on your Honda engine were designed, built, and certified to conform with EPA, California, and Canadian emission regulations. We recommend the use of Honda Genuine parts whenever you have maintenance done. These original-design replacement parts are manufactured to the same standards as the original parts, so you can be confident of their performance. The use of replacement parts that are not of the original design and quality may impair the effectiveness of your emission control system.

A manufacturer of an aftermarket part assumes the responsibility that the part will not adversely affect emission performance. The manufacturer or rebuilder of the part must certify that use of the part will not result in a failure of the engine to comply with emission regulations.

Maintenance

Follow the maintenance schedule on page 68 and 69. Remember that this schedule is based on the assumption that your machine will be used for its designed purpose. Sustained high-load operation, or use in unusual conditions, will require more frequent service.

Star Label

US, Puerto Rico, and US Virgin Islands

A Star label was applied to this outboard motor in accordance with the requirements of the California Air Resources Board.

The Star Label means Cleaner Marine Engine

This engine has been certified as a:

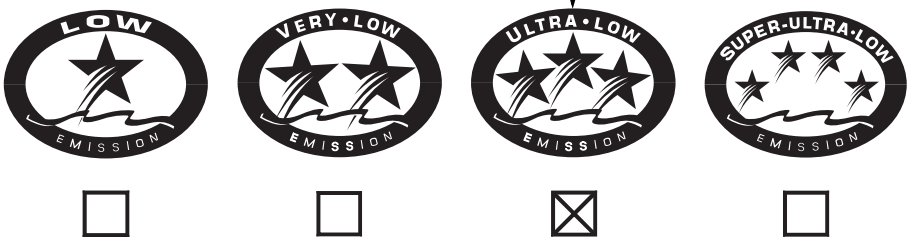

☐ ☐ ☒ ☐

The Symbol for Cleaner Marine Engines:

Cleaner Air and Water - for healthier lifestyle and environment.

Better Fuel Economy - burns up to 30 - 40 percent less gas and oil than conventional carbureted two-stroke engines, saving money and resources.

Longer Emission Warranty - protects consumer for worry-free operation.

One Star Low Emission

The one-star label identifies engines that meet the Air Resources Board's Personal Watercraft and Outboard marine engine 2001 exhaust emission standards. Engines meeting these standards have 75% lower emissions than conventional carbureted two-stroke engines. These engines are equivalent to the U.S. EPA's 2006 standards for marine engines.

Two Stars Very Low Emission

The two-star label identifies engines that meet the Air Resources Board's Personal Watercraft and Outboard marine engine 2004 exhaust emission standards. Engines meeting these standards have 20% lower emissions than One Star-Low Emission engines.

Three Stars Ultra Low Emission

The three-star label identifies engines that meet the Air Resources Board's Personal Watercraft and Outboard marine engine 2008 exhaust emission standards or the Sterndrive and Inboard marine engine 2003-2008 exhaust emission standards. Engines meeting these standards have 65% lower emissions than One Star-Low Emission engines.

Four Stars Super Ultra Low Emission

The four-star label identifies engines that meet the Air Resources Board's Sterndrive and Inboard marine engine 2009 exhaust emission standards. Personal Watercraft and Outboard marine engines may also comply with these standards. Engines meeting these standards have 90% lower emissions than One Star-Low Emission engines.

Cleaner Watercraft - Get the Facts
1-800-END-SMOG
www.arb.ca.gov

Specifications

MODEL		BF25D
Description code		BATJ
Type		HG
Overall length		28.3 in (720 mm)
Overall width		14.8 in (375 mm)
Overall height	S	47.0 in (1,195 mm)
	L	52.0 in (1,320 mm)
Transom height (when transom angle at 12°)	S	17.0 in (431 mm)
	L	21.7 in (552 mm)
Dry mass [weight]*	S	176.4 lbs (80.0 kg)
	L	180.8 lbs (82.0 kg)
Rated power		18.7 kW (25 HP)
Full throttle range		5,000 – 6,000 rpm
Engine type		4 stroke OHC in-line 3 cylinder
Displacement		33.7 cu-in (552 cm^3)
Starter system		Electric starter
Ignition system		Digital ICM (Ignition Control Module)
Lubrication system		Trochoid pump pressure lubrication
Specified oil		Engine: API standard (SG, SH or SJ) SAE/FC-W 5W-30 Gear case: API standard (GL-4) SAE 90 Hypoid gear oil
Oil capacity		Engine: 1.7 US qt (1.6 L) Without oil filter change 1.8 US qt (1.7 L) With oil filter change Gear case: 0.29 US qt (0.27 L)

CARB star label	ULTRA LOW EMISSION
D.C. output	12V – 10A
Cooling system	Water cooling with thermostat
Exhaust system	Water exhaust
Spark plugs	DR7EA (NGK) X22ESR-U (DENSO)
Fuel pump	Diaphragm type
Fuel	Unleaded gasoline (86 pump octane or higher)
Tank capacity	6.6 US gal (25 L)
Gear change	Forward-Neutral-Reverse (dog type)
Steering angle	40° right and left
Transom angle	4 stages (8°, 12°, 16°, 20°)
Tilt angle (when transom angle at 12°)	Stageless (64°)
Trim angle (when transom angle at 12°)	– 4° to 12°

Tuneup

Spark plug gap	0.024 – 0.028 in (0.6 – 0.7 mm)	See page 77
Idle speed	950 ± 50 rpm	See shop manual
Valve clearance (cold)	Intake: 0.12 ± 0.02 mm Exhaust: 0.20 ± 0.02 mm	See shop manual
Other specifications	No other adjustment is needed	

* With propeller

Honda outboard motors are power rated in accordance with NMMA procedures and using the ICOMIA standard 28/23.

Specifications

MODEL		BF25D	
Description code		BATJ	
Type		RG	RT
Overall length		25.2 in (640 mm)	
Overall width		14.8 in (375 mm)	
Overall height	L	52.0 in (1,320 mm)	
Transom height (when transom angle at 12°)	L	21.7 in (552 mm)	
Dry mass [weight]*	L	170.9 lbs (77.5 kg)	175.3 lbs (79.5 kg)
Rated power		18.7 kW (25 HP)	
Full throttle range		5,000 – 6,000 rpm	
Engine type		4 stroke OHC in-line 3 cylinder	
Displacement		33.7 cu-in (552 cm^3)	
Starter system		Electric starter	
Ignition system		Digital ICM (Ignition Control Module)	
Lubrication system		Trochoid pump pressure lubrication	
Specified oil		Engine: API standard (SG, SH or SJ) SAE/FC-W 5W-30 Gear case: API standard (GL-4) SAE 90 Hypoid gear oil	
Oil capacity		Engine: 1.7 US qt (1.6 L) Without oil filter change 1.8 US qt (1.7 L) With oil filter change Gear case: 0.29 US qt (0.27 L)	

CARB star label	ULTRA LOW EMISSION
D.C. output	12V – 10A
Cooling system	Water cooling with thermostat
Exhaust system	Water exhaust
Spark plugs	DR7EA (NGK) X22ESR-U (DENSO)
Fuel pump	Diaphragm type
Fuel	Unleaded gasoline (86 pump octane or higher)
Tank capacity	6.6 US gal (25 L)
Gear change	Forward-Neutral-Reverse (dog type)
Steering angle	40° right and left
Transom angle	4 stages (8°, 12°, 16°, 20°)
Tilt angle (when transom angle at 12°)	Stageless (64°)
Trim angle (when transom angle at 12°)	– 4° to 12°

Tuneup

Spark plug gap	0.024 – 0.028 in (0.6 – 0.7 mm)	See page 77
Idle speed	950 ± 50 rpm	See shop manual
Valve clearance (cold)	Intake: 0.12 ± 0.02 mm Exhaust: 0.20 ± 0.02 mm	See shop manual
Other specifications	No other adjustment is needed	

* With propeller

Honda outboard motors are power rated in accordance with NMMA procedures and using the ICOMIA standard 28/23.

Specifications

MODEL		BF30D
Description code		BAUJ
Type		HG
Overall length		28.3 in (720 mm)
Overall width		14.8 in (375 mm)
Overall height	S	47.0 in (1,195 mm)
	L	52.0 in (1,320 mm)
Transom height (when transom angle at 12°)	S	17.0 in (431 mm)
	L	21.7 in (552 mm)
Dry mass [weight]*	S	176.4 lbs (80.0 kg)
	L	180.8 lbs (82.0 kg)
Rated power		22.4 kW (30 HP)
Full throttle range		5,000 – 6,000 rpm
Engine type		4 stroke OHC in-line 3 cylinder
Displacement		33.7 cu-in (552 cm^3)
Starter system		Electric starter
Ignition system		Digital ICM (Ignition Control Module)
Lubrication system		Trochoid pump pressure lubrication
Specified oil		Engine: API standard (SG, SH or SJ) SAE/FC-W 5W-30 Gear case: API standard (GL-4) SAE 90 Hypoid gear oil
Oil capacity		Engine: 1.7 US qt (1.6 L) Without oil filter change 1.8 US qt (1.7 L) With oil filter change Gear case: 0.29 US qt (0.27 L)

CARB star label	ULTRA LOW EMISSION
D.C. output	12V – 10A
Cooling system	Water cooling with thermostat
Exhaust system	Water exhaust
Spark plugs	DR7EA (NGK) X22ESR-U (DENSO)
Fuel pump	Diaphragm type
Fuel	Unleaded gasoline (86 pump octane or higher)
Tank capacity	6.6 US gal (25 L)
Gear change	Forward-Neutral-Reverse (dog type)
Steering angle	40° right and left
Transom angle	4 stages (8°, 12°, 16°, 20°)
Tilt angle (when transom angle at 12°)	Stageless (64°)
Trim angle (when transom angle at 12°)	– 4° to 12°

Tuneup

Spark plug gap	0.024 – 0.028 in (0.6 – 0.7 mm)	See page 77
Idle speed	950 ± 50 rpm	See shop manual
Valve clearance (cold)	Intake: 0.12 ± 0.02 mm Exhaust: 0.20 ± 0.02 mm	See shop manual
Other specifications	No other adjustment is needed	

* With propeller

Honda outboard motors are power rated in accordance with NMMA procedures and using the ICOMIA standard 28/23.

Specifications

MODEL		BF30D	
Description code		BAUJ	
Type		RG	RT
Overall length		25.2 in (640 mm)	
Overall width		14.8 in (375 mm)	
Overall height	S	47.0 in (1,195 mm)	
	L	52.0 in (1,320 mm)	
Transom height (when transom angle at 12°)	S	17.0 in (431 mm)	
	L	21.7 in (552 mm)	
Dry mass [weight]*	S	———————	170.9 lbs (77.5 kg)
	L	170.9 lbs (77.5 kg)	175.3 lbs (79.5 kg)
Rated power		22.4 kW (30 HP)	
Full throttle range		5,000 – 6,000 rpm	
Engine type		4 stroke OHC in-line 3 cylinder	
Displacement		33.7 cu-in (552 cm^3)	
Starter system		Electric starter	
Ignition system		Digital ICM (Ignition Control Module)	
Lubrication system		Trochoid pump pressure lubrication	
Specified oil		Engine: API standard (SG, SH or SJ) SAE/FC-W 5W-30 Gear case: API standard (GL-4) SAE 90 Hypoid gear oil	
Oil capacity		Engine: 1.7 US qt (1.6 L) Without oil filter change 1.8 US qt (1.7 L) With oil filter change Gear case: 0.29 US qt (0.27 L)	

CARB star label	ULTRA LOW EMISSION
D.C. output	12V – 10A
Cooling system	Water cooling with thermostat
Exhaust system	Water exhaust
Spark plugs	DR7EA (NGK) X22ESR-U (DENSO)
Fuel pump	Diaphragm type
Fuel	Unleaded gasoline (86 pump octane or higher)
Tank capacity	6.6 US gal (25 L)
Gear change	Forward-Neutral-Reverse (dog type)
Steering angle	40° right and left
Transom angle	4 stages (8°, 12°, 16°, 20°)
Tilt angle (when transom angle at 12°)	Stageless (64°)
Trim angle (when transom angle at 12°)	– 4° to 12°

Tuneup

Spark plug gap	0.024 – 0.028 in (0.6 – 0.7 mm)	See page 77
Idle speed	950 ± 50 rpm	See shop manual
Valve clearance (cold)	Intake: 0.12 ± 0.02 mm Exhaust: 0.20 ± 0.02 mm	See shop manual
Other specifications	No other adjustment is needed	

* With propeller

Honda outboard motors are power rated in accordance with NMMA procedures and using the ICOMIA standard 28/23.

CONSUMER INFORMATION

Dealer Locator Information

To find an authorized Honda Servicing Dealer

For USA:
Visit our website:
http://marine.honda.com and click on Find a Dealer

For Canada:
Call 1-888-946-6329 or visit our website:
English
http://marine.honda.ca/dealerlocator
French
http://marine.honda.ca/trouver-concessionaire

Honda Publications

These publications will give you additional information for maintaining
and repairing your outboard motor.

Shop Manual

This manual covers complete maintenance and overhaul procedures. It is intended to be used by a skilled technician.

For USA:
Shop manuals are available through your Honda Marine dealer or visit http://marine.honda.com

For Canada:
Contact your dealer for information on the Shop Manual.

Parts Catalog

For USA:
This manual provides complete, illustrated parts lists.
The catalog is available through your Honda Marine dealer or visit http://marine.honda.com

For Canada:
Contact your dealer for information on Parts.

Accessory Catalog

Your authorized Honda Marine dealer offers a wide selection of accessories (optional equipment, oils, and lubricants) to enhance your boating experience.

For USA:
Visit http://marine.honda.com to see the entire catalog of accessories.

For Canada:
Check with your dealer or visit http://marine.honda.ca to view the range of accessories available.

Customer Service Information

Contacting Honda

Your Owner's Manual was written to cover most of the questions you might ask about your Honda. Any questions not answered in the Owner's Manual can be answered by your Honda dealer. If your dealer doesn't have an immediate answer, they should be able to get it for you.

If you have a difference of opinion with your dealer, please remember that each dealership is independently owned and operated. That's why it's important to work to resolve any differences at the dealership level. If the service personnel are unable to assist you, please discuss your concerns with the dealer management such as the Service Manager or the dealership's owner.

If you need to contact Honda regarding your experiences with your Honda product or with your dealer, please contact the Honda office in your region:

American Honda Motor Co., Inc.
Marine Division
Customer Relations Office
4900 Marconi Drive
Alpharetta, GA 30005-8847
Telephone: (770) 497-6400
M-F 8:30 am-7:00 pm (Eastern Time Zone)

Honda Canada Inc.
Customer Relations Office
180 Honda Boulevard
Markham, Ontario L6C 0H9
Tel: 1-888-946-6329 (Toll free)
Fax: 1-877-939-0909 (Toll free)

Please include the following information in your communication:

- Your name, address and telephone number (complete with area code)
- Model and complete serial number
- Date of purchase
- Name and location of selling dealer
- Name and location of servicing dealer (if different)
- A detailed description of your concerns

Warranty Coverage

Your new Honda is covered by the following warranties:

- Distributor's Limited Warranty
- Emission Control System Warranty

Please read the warranty statements contained in this manual. There are responsibilities, restrictions, and exclusions that apply to these warranties.

To obtain warranty service you must take your Honda outboard motor, together with proof of original retail purchase date, at your expense, to a Honda engine dealer or distributor authorized to sell that product in the United States, Puerto Rico, the U.S. Virgin Islands or Canada.

It is important to realize that your warranty applies to defects in material or workmanship of your Honda. Your warranty coverage does not apply to normal wear or deterioration associated with using your Honda outboard motor.

Your warranty coverage will not be voided if you choose to perform your own maintenance. However, you should have the proper tools and service information and be mechanically qualified. Failures that occur due to modifications, improper maintenance, or service are not covered.

Warranty Service

Please remember that recommended maintenance interval servicing is not included in your warranty coverage. Additionally, your warranty does not apply to the normal wear of items (such as spark plug(s), water pump, etc.).

As the owner of a Honda product, your servicing dealer may ask you to authorize an inspection. If the problem is covered under warranty, your dealer will perform any warranty repairs for you at no cost. However, you may be responsible for additional non-warranty charges.

If you have questions about warranty coverage or the nature of the repair, it is best to talk to the service manager of your Honda dealer.

Sometimes, in spite of the best intentions of all concerned, a misunderstanding may occur. If you aren't satisfied with your dealer's handling of the situation, we suggest you discuss your problem with the appropriate member of the dealership's management team. If the problem has already been reviewed with the appropriate manager of the Service, Parts, or Sales department, contact the owner of the dealership or their designated representative.

Warranty Statements

The American Honda Distributor's Limited Warranty applies to outboards purchased in the United States, Puerto Rico, or the U.S. Virgin Islands. The Honda Canada Distributor's Warranty applies to outboards purchased in Canada. The product warranty is only valid in the country where the product was purchased.

United States, Puerto Rico and U.S. Virgin Islands

Distributor's Limited Warranty

This warranty is limited to Honda Outboard Motors and related original equipment distributed by American Honda Motor Co., Inc., Power Equipment Division, 4900 Marconi Drive, Alpharetta, Georgia 30005-8847.

Products Covered by Warranty:	Length of Warranty: (from date of original retail purchase)		
	NON-COMMERCIAL/ NON-RENTAL	COMMERCIAL/RENTAL	STATE/LOCAL/FEDERAL GOVERNMENT
All models purchased on or after Jan. 1, 2016 (2)	60 months	24 months	36 months
All models purchased between July 1, 2008 and December 31, 2015 (2)	60 months	12 months	24 months
All models purchased on or before June 30, 2008 (1) (2)	36 months	12 months	24 months
Related original equipment items: BF5 through BF20 models: Portable fuel tank and original propeller. All models: Primer bulb/fuel line assembly and tiller handle.	The same duration as the outboard with which they were purchased.(3)		

(1) Models purchased prior to July 1, 2008 (unless previously purchased with True-5 warranty from a participating dealer).
(2) 40, 65, & 105 Jet models: Jet pump assembly is a dealer installed option. Jet pump warranty is provided by Specialty Manufacturing Co. (Outboard Jets).
(3) Portable fuel tanks: 24 months or the same duration as the outboard they were purchased with, whichever is longer.

To Qualify for This Warranty:
The Honda Outboard Motor must be purchased from American Honda or a dealer authorized by American Honda to sell Honda Outboard Motors in the United States, Puerto Rico, or the U.S. Virgin Islands. This limited warranty applies to the first retail purchaser and each subsequent owner during the applicable warranty time period.

What American Honda Will Repair or Replace Under Warranty:
American Honda will repair or replace, at its option, any part that is proven to be defective in material or workmanship under normal use during the applicable warranty time period. Warranty repairs and replacements will be made without charge for parts or labor. Anything replaced under warranty becomes the property of American Honda Motor Co., Inc.

All parts replaced under warranty will be considered as part of the original product and any warranty on those parts will expire coincidentally with the original product warranty.

To Obtain Warranty Service:

You must, at your expense, take your Honda Outboard Motor and proof of the original purchase date to any dealer who is authorized to service Honda Outboard Motors in the United States, Puerto Rico, or the U.S. Virgin Islands, during the dealer's normal business hours. If you are unable to obtain warranty service, or are dissatisfied with the warranty service you receive, take the following steps: First, contact the owner of the dealership involved; normally this should resolve the problem. However, if you should require further assistance, write or call the Honda Marine Customer Relations Department of American Honda Motor Co., Inc. Please see *Contacting Honda* on page 119.

Exclusions:
This warranty does not extend to the following:

- Conditions caused by lack of routine maintenance or improper storage (as outlined in the Owner's Manual)
- Conditions caused by the use of propeller(s) that do not allow the outboard motor to run in its recommended full throttle rpm range
- Operation inconsistent with the recommended operation/duty cycle (as outlined in the Owner's Manual)
- Parts affected or damaged by an abuse, submersion and/or collision
- Normal wear and tear
- Fuel contamination and water entering the engine through the fuel intake, air intake, or exhaust system
- Operation with fuels, oils, additives and lubricants which are not suitable for use in the product
- Use in an application for which the outboard motor was not designed, such as racing or competitive use or any other misuse or neglect
- Incorporation of unsuitable attachments or parts
- The unauthorized alteration, improper installation and/or rigging, or any causes other than defects in material or workmanship
- Corrosion to steering system or electrical components, corrosion due to electrolysis, water born foreign chemicals, improper service or corrosion caused by damage or abuse
- Reimbursement for towing charges, in and out of water charges, or technician travel time
- Growth of marine organisms on motor surfaces, external or internal
- Any product that has ever been declared a total loss or sold for salvage by a financial institution or insurer, or that has been issued a ''salvage'' or similar title under any state's law.

Disclaimer of consequential damage and limitation of implied warranties:
American Honda disclaims any responsibility for loss of time or use of the outboard, revenue, or the equipment in which the outboard is installed, transportation, commercial loss, or any other incidental or consequential damage. Any implied warranties are limited to the duration of this written limited warranty.
Some states do not allow limitations on how long an implied warranty lasts and/or do not allow the exclusion or limitation of incidental or consequential damages, so the above exclusions and limitations may not apply to you. This warranty gives you specific legal rights, and you may also have other rights which vary from state to state.

Accessories and Replacement Parts
This warranty is limited to Honda Marine parts, accessories and apparel when distributed by American Honda Motor Co., Inc., 1919 Torrance Blvd., Torrance, California 90501-2746.

Products Covered by Warranty:	Length of Warranty: (from date of original retail purchase)		
	NON-COMMERCIAL	COMMERCIAL/RENTAL	STATE/LOCAL/FEDERAL GOVERNMENT
Accessories other than noted below	12 months	3 months	3 months
Emission related accessories: Portable fuel tanks, fuel line assemblies, and water/fuel separators	24 months	24 months	24 months
Replacement Parts	6 months	3 months	3 months

To Qualify for This Warranty:
1. The accessories or replacement parts must be purchased from American Honda or a dealer, distributor, or distributor's dealer authorized by American Honda to sell those products in the United States, Puerto Rico, and the U.S. Virgin Islands. Parts and Accessories must be purchased for installation on original Honda equipment or engines to be eligible for warranty coverage. Installing parts and accessories on non-Honda products or engines voids this warranty.
2. You must be the first retail purchaser. This warranty is not transferable to subsequent owners.

What American Honda Will Repair or Replace Under Warranty:
American Honda will repair or replace, at its option, any marine product accessories or replacement parts that are proven to be defective in material or workmanship under normal use during the applicable warranty time period. Anything replaced under warranty becomes the property of American Honda Motor Co., Inc. All parts replaced under warranty will be considered as part of the original product and any warranty on those parts will expire coincidentally with the original product warranty.

Accessories and replacement parts, installed by a dealer who is authorized by American Honda to sell them, will be repaired or replaced under warranty without charge for parts or labor. If installed by anyone else, accessories and replacement parts will be repaired or replaced under warranty without charge for parts, but any labor charges will be the responsibility of the purchaser.

To Obtain Warranty Service:
You must, at your expense, take the Honda Outboard Motor product accessory or replacement part or the outboard motor or boat on which the accessory or replacement part is installed, and proof of purchase to any Honda Marine authorized service facility or dealer in the United States, Puerto Rico, or the U.S. Virgin Islands, during normal business hours.

Exclusions:
This warranty does not extend to accessories or parts affected or damaged by collision, normal wear, use in an application for which the product was not designed or any other misuse, neglect, incorporation or use of unsuitable attachments or parts, unauthorized alteration, improper installation, or any causes other than defects in material or workmanship of the product.
Installing parts and accessories on non-Honda products or engines voids this warranty.

Disclaimer of consequential damage and limitation of implied warranties:
American Honda disclaims any responsibility for loss of time or use of the outboard motor, or the boat on which the product is installed, transportation, commercial loss, or any other incidental or consequential damage. Any implied warranties are limited to the duration of this written warranty. Some states do not allow limitations on how long an implied warranty lasts and/or do not allow the exclusion or limitation of incidental or consequential damages, so the above exclusions and limitations may not apply to you. This warranty gives you specific legal rights, and you may also have other rights, which vary from state to state.

Emission Control System Warranty

Your new Honda outboard engine complies with both the U.S. EPA and State of California emission regulations. American Honda provides the same emission warranty coverage for outboard engines sold in all 50 states. In all areas of the United States your outboard engine must be designed, built, and equipped to meet the U.S. EPA and California Air Resources Board emission standard for spark ignited marine engines.

CALIFORNIA EMISSIONS CONTROL SYSTEM WARRANTY STATEMENT YOUR WARRANTY RIGHTS AND OBLIGATIONS

The California Air Resources Board (CARB) and American Honda Motor Co., Inc. are pleased to explain the emission control system warranty on your 2018 Honda outboard engine. In California, new outboard engines must be designed, built, and equipped to meet the state's stringent anti-smog standards.
American Honda Motor Co., Inc. must warrant the emission control system on your outboard engine for the periods of time listed below provided there has been no abuse, neglect, or improper maintenance of your outboard engine.

Your emission control system may include parts such as the carburetor or fuel injection system, the ignition system, catalytic converter, canisters, clamps, filters, fuel caps, fuel lines, fuel tanks, valves, and vapor hoses. Also included may be hoses, belts, connectors, and other emission-related assemblies.
Where a warrantable condition exists, American Honda Motor Co., Inc. will repair your outboard engine at no cost to you including diagnosis, parts, and labor.

MANUFACTURER'S WARRANTY COVERAGE:

Select emission control parts from model year 2010 and later outboard engines are warranted for five years or 250 hours of use, whichever first occurs;
or the length of the *Honda Marine Distributor's Limited Warranty*, whichever is longer. The evaporative emission control system from model year 2010 and later outboard engines are warranted for two years with no limit on hours of use, or the length of the *Honda Marine Distributor's Limited Warranty*, whichever is longer, from the date of delivery to the retail purchaser. However, warranty coverage based on the hourly period is only permitted for engines equipped with hour meters as defined in § 2441(a)(13)* or their equivalent. If any emission-related part on your engine is defective under warranty, the part will be repaired or replaced by American Honda Motor Co., Inc. See the *Emission Control System Warranty Parts* table on page 130 for parts description.

* California Code of Regulations.

OWNER'S WARRANTY RESPONSIBILITIES:

As the outboard engine owner, you are responsible for the performance of the required maintenance listed in your owner's manual. American Honda Motor Co., Inc. recommends that you retain all receipts covering maintenance on your outboard engine, but American Honda Motor Co., Inc. cannot deny warranty solely for the lack of receipts or your failure to ensure the performance of all scheduled maintenance.
As the outboard engine owner, you should, however, be aware that American Honda Motor Co., Inc. may deny you warranty coverage if your outboard engine or a part has failed due to abuse, neglect, improper maintenance, or unapproved modifications.
You are responsible for presenting your outboard engine to a Honda Marine dealer as soon as a problem exists. The warranty repairs will be completed in a reasonable amount of time, not to exceed 30 days.
If you have any questions regarding your warranty rights and responsibilities, you should contact

American Honda Motor Co., Inc.
Marine Division Customer Relations Office
4900 Marconi Drive
Alpharetta, Georgia 30005-8847
Telephone: (770) 497-6400

WARRANTY COVERAGE:

See *Manufacturer's Warranty Coverage* above for warranty coverage terms. This warranty is transferred to each subsequent purchaser for the duration of the warranty period.

Warranty repairs will be made without charge for diagnosis, parts, and labor. All defective parts replaced under this warranty become the property of American Honda Motor Co., Inc. A list of warranty parts is on page 130. Normal maintenance items, such as spark plugs and filters, that are on the warranted parts list are warranted up to their required replacement interval only.

American Honda Motor Co., Inc. is also liable for damages to other engine components caused by a failure of any warranted part during the warranty period.

Only Honda approved replacement parts will be used in the performance of any warranty repairs, and they will be provided without charge to the owner. You may use any replacement part as defined in § 1900(b)(20)* in the performance of any maintenance or repairs. Honda cannot deny coverage under the emission warranty solely for use of non-Honda replacement parts or service performed at a location other than an authorized Honda dealership; however, use of a part that is not functionally identical to the original equipment part in any respect that may in any way affect emissions (including durability) could result in denial of coverage. If a non-Honda replacement part is used in the repair or maintenance of your engine, and an authorized Honda Marine dealer determines it causes the failure of a warranted part, your warranty claim may be denied. If the part in question is not related to the reason that your engine requires repair, your claim will not be denied.

* California Code of Regulations

TO OBTAIN WARRANTY SERVICE:

You must take your Honda outboard engine, along with your sales registration card or other proof of original purchase date, at your expense, to any Honda Marine dealer that is authorized by American Honda Motor Co., Inc. to sell and service that Honda marine product during its normal business hours. Claims for repair or adjustment found to be caused solely by defects in material or workmanship will not be denied because the engine was not properly maintained and used.

If you are unable to obtain warranty service, or are dissatisfied with the warranty service you received, contact the owner of the dealership involved.

Normally this should resolve your problem. However, if you require further assistance, write or call the Honda Marine Customer Relations Office of American Honda Motor Co., Inc.

EXCLUSIONS:

Failures other than those resulting from defects in material or workmanship are not covered by this warranty. This warranty does not extend to emission control systems or parts which are affected or damaged by owner abuse, neglect, improper maintenance, misuse, misfueling, improper storage, and/or collision, the incorporation of, or use of, unsuitable attachments, or the unauthorized alteration of any part. This warranty does not cover replacement of expendable maintenance items made in connection with required maintenance service after the items first scheduled replacement as listed in the maintenance section of the product owner's manual, such as: spark plugs and filters.

DISCLAIMER OF CONSEQUENTIAL DAMAGE AND LIMITATION OF IMPLIED WARRANTIES:

American Honda Motor Co., Inc. disclaims any responsibility for incidental or consequential damages such as loss of time or the use of outboard engine, or any commercial loss due to the failure of the equipment; and any implied warranties are limited to the duration of this written warranty. This warranty is applicable only where the California or U.S. EPA emission control system warranty regulation is in effect.

EMISSION CONTROL SYSTEM WARRANTY PARTS:

SYSTEMS COVERED BY THIS WARRANTY:	PARTS DESCRIPTION:	LENGTH OF WARRANTY:
Evaporative	Portable fuel tank, Outboard internal fuel tank, Fuel cap, Fuel hoses, Primer bulb, Fuel hose joint, Vapor separator, and Carbon canister, All other parts not listed that may affect the evaporative emissions control system	Two years, no limit on hours of use; or the length of the *Honda Distributor's Limited Warranty*, whichever is longer.
Fuel Metering	Carburetor assembly, Throttle body, Fuel injector, Fuel pump, Fuel pressure regulator, Throttle position sensor, Intake air temperature sensor, Engine temperature sensor, Manifold absolute pressure sensor, Idle air control valve, Barometric pressure sensor, Fuel line solenoid valve, Intake manifold, Intake valves, and Oxygen sensor or Air fuel ratio sensor	Five years or 250 hours of use, whichever first occurs; or the length of the *Honda Distributor's Limited Warranty*, whichever is longer.
Air Induction	Air intake duct, Intake manifold tuning valve (Intake air bypass control valve)	
Ignition	Flywheel magneto, Ignition pulse generator, Ignition coil assembly, Ignition control module, Engine control module, Crankshaft position sensor, Spark plug cap, Spark plug*, Knock sensor, and Camshaft position sensor	
Lubrication System	Oil pump and internal parts	
Crankcase Emission Control	Crankcase breather tube, Positive crankcase ventilation valve, Oil filler cap	
Exhaust	Exhaust manifold and Exhaust valves	
Valve Control System	Rocker arm oil control valve	
Miscellaneous Parts	Tubing, fittings, seals, gaskets, and clamps associated with these listed systems.	
* Covered up to the first required replacement only. See the *Maintenance Schedule* on page 68 and 69.		

Canada

Distributor's Warranty

HONDA CANADA INC., for and on behalf of Honda Motor Co. Ltd., Tokyo, Japan, gives the following written warranty on each new marine product manufactured by Honda Motor Co. Ltd., Japan, distributed in Canada by Honda Canada Inc. and sold by authorized Honda Marine dealers.

Whenever used herein, the word "Honda" refers to Honda Canada Inc. and/or Honda Motor Co. Ltd., as appropriate from the context.

HONDA WARRANTS THAT each new Honda Marine product will be free, under normal use and maintenance, from any defects in material or workmanship for the relevant warranty period set forth below. If any defects should be found in a Honda Marine product within the relevant warranty period, necessary repairs and replacements with a new part or the Honda equivalent shall be made at no cost to the consumer for parts and labour, when Honda acknowledges that such defects are attributable to faulty material or workmanship at the time of manufacture.

WARRANTY PERIOD RETAILED ON OR AFTER APRIL 1, 2005:

	Non-commercial use	Commercial use
All Honda Outboard Models	36 Months	12 Months

THIS WARRANTY COVERS

a) Any Honda Marine product purchased in Canada from an authorized Honda dealer which has been registered at the time of purchase on a form provided by Honda, which has had set-up and pre-delivery service performed by an authorized Honda dealer and which is normally operated in Canada;
b) Any factory installed part (except normal maintenance parts referred to in "THIS WARRANTY DOES NOT COVER"); and
c) Any marine product on which required maintenance services have been performed as prescribed in the Owner's Manual.

THIS WARRANTY DOES NOT COVER

a) Any repairs required as a result of collision, accident, striking any object, misuse or lack of required maintenance;
b) Any repairs required as a result of any attachments, parts or devices installed by or repairs done by a party other than an authorized Honda dealer;
c) Any outboard that has been operated out of water, (Run Dry) damaging the water pump and or engine components due to insufficient cooling water.
d) Any marine products modified, altered, disassembled or remodelled;
e) Normal maintenance services, including tightening of nuts, bolts and fittings and engine tune-up and the replacement of parts made in connection with normal maintenance services including filters, spark plugs and wires, fuses, belts, lubricants and other expendables susceptible to natural wear;
f) Outboard propeller or shear pin.
g) All accessories or attachments.

THE OWNER'S OBLIGATION

In order to maintain the validity of this DISTRIBUTORS WARRANTY, the required maintenance services as set forth in the Owner's Manual must be performed at the proper intervals and detailed receipts and records retained as proof.

TO OBTAIN WARRANTY SERVICE

You must take your Honda Marine product, at your expense, during normal service hours, to any authorized Honda Marine dealership. If you are unable to obtain or are dissatisfied with the warranty service you receive, first contact the owner of the dealership involved; this should resolve the problem. If you require further assistance, contact Honda Canada's Customer Relations Department at:

HONDA CANADA INC.
Customer Relations Office
180 Honda Boulevard
Markham, Ontario L6 0H9

TELEPHONE: 1-888-946-6329 TOLL FREE
FAX : 1-877-939-0909 TOLL FREE

REPLACEMENT PARTS AND ACCESSORY WARRANTY

New genuine Honda replacement parts or accessories sold to a consumer or installed by an authorized Honda Marine dealer which are not covered by the DISTRIBUTORS WARRANTY are warranted for a period of one year from date of purchase, provided, however, that this Replacement Parts and Accessory Warranty does not apply to any replacement parts modified, used with, or installed on a marine product for which the replacement parts were not intended. Electrical components that are not installed by the dealer (sold over the counter) are not covered by warranty.

ENTIRE WRITTEN WARRANTY

This DISTRIBUTORS WARRANTY and the REPLACEMENT PARTS AND ACCESSORY WARRANTY are the only and the entire written warranties given by Honda for Marine engines. No dealer or his agent or employee is authorized to extend or enlarge on these warranties on behalf of Honda by any written or verbal statement or advertisement.

DISCLAIMER

To the extent the law permits, Honda disclaims any responsibility for loss of time or use of the product, transportation or towing costs or any other indirect, incidental or consequential damage, inconvenience or commercial loss.

NOTICE TO CONSUMER

The provisions contained in these written warranties are not intended to limit, modify, take away from, disclaim or exclude any warranties set forth in or the operation of The Consumer Products Warranties Act, 1977 (Saskatchewan), The Consumer Product Warranty and Liability Act (New Brunswick), The Consumer Protection Act (Quebec), or any other similar provincial or federal legislation.

INDEX

Anodes 32
  Replacement 85
ARE YOU READY TO GET UNDERWAY? 40
ATTACHMENT 36

Battery 109
BATTERY WILL NOT CHARGE AND
  ELECTRIC STARTER WILL NOT OPERATE 103
BEFORE OPERATION 40
BOAT TRANSOM REQUIREMENTS 35
BREAK-IN PROCEDURE 42

Carburetor Modification for High Altitude
  Operation 109
CLEANING AND FLUSHING 88
Common Controls 27
COMPONENT AND CONTROL LOCATIONS 14
CONSUMER INFORMATION 118
CONTROL AND FEATURE IDENTIFICATION
  CODES 13
CONTROLS 19
CONTROLS AND FEATURES 13
Cooling System Indicator 31
CRUISING 59
Customer Service Information 119

Dealer Locator Information 118
Distributor's Limited Warranty 121
Distributor's Warranty 131

ELECTRIC STARTER WILL NOT OPERATE 98
ELECTRICAL CONNECTIONS 38
EMERGENCY STARTING 51
Emission Control System Information 110
Emission Control System Warranty 126
Emergency Stop Switch Clip and
  Emergency Stop Switch
    LRG, SRT and LRT Types (remote control) 23
    SHG and LHG Types (long tiller handle) 20
Engine
  Cover
    Latches 27
    REMOVAL AND INSTALLATION 71
  Oil
    Change 73
    Level Check 72
    Recommendations 75
ENGINE OVERHEATS 102
ENGINE WILL NOT START 99

Fast Idle Lever 24
Fuel
Filler Cap Vent Knob [standard equipment (Canadian types)], [optional equipment (American types)] 33
Filter Inspection and Replacement 82
Gauge [standard equipment (Canadian types)], [optional equipment (American types)] 29
HOSE CONNECTIONS 45
PRIMING 46
Priming Bulb 34
RECOMMENDATIONS 81
Fuse Replacement 103

Gearshift Lever (SHG and LHG Types) 21
Gearshift/Throttle Control Lever
LRG, SRT and LRT Types (remote control) 25
GEARSHIFT AND THROTTLE OPERATION
SHG and LHG Types (long tiller handle) 56
LRG, SRT and LRT Types (remote control) 57

HARD STARTING OR STALLS AFTER STARTING 101
Honda Publications 118

Ignition Switch
SHG and LHG Types 19
LRG, SRT and LRT Types (remote control) 23
IMPORTANT SAFETY INFORMATION 7
INDICATORS 30
INFREQUENT OR OCCASIONAL USE 46
INSTALLATION 35
INSTRUMENTS 29
IS YOUR OUTBOARD MOTOR READY TO GO? 40

Lubrication Points 76

MAINTENANCE SAFETY 66
MAINTENANCE SCHEDULE 68
MANUAL RELIEF VALVE (SRT and LRT Types) 27, 71
MOORING, BEACHING, LAUNCHING 63

Oil Pressure Indicator 30
OIL PRESSURE INDICATOR GOES OFF AND
ENGINE SPEED IS LIMITED 104
OPERATION 42
OTHER FEATURES 32
OUTBOARD MOTOR SAFETY 7
Overheat Indicator 31
OVERHEAT INDICATOR COMES ON AND
ENGINE SPEED IS LIMITED 105
Overrev Limiter 33

PORTABLE FUEL TANK
[standard equipment (Canadian types)],
[optional equipment (American types)] 33, 44
and Tank Filter Cleaning 84
POWER REQUIREMENTS 35
Power Tilt Switch (SRT and LRT Types) 26
Power Trim/Tilt Switch (SRT and LRT Types) 26
Propeller Replacement 86

REFUELING 79
REMOVAL FROM STORAGE 94

SAFE OPERATING PRECAUTIONS 42
SAFETY LABEL LOCATIONS 9
Serial Number Locations 108
SERVICING YOUR OUTBOARD MOTOR 65
SHALLOW WATER OPERATIONS 61
SPARE SWITCH CLIP AND
EMERGENCY STARTER ROPE 67
Spark Plug Service 77
Specifications 114
Star Label 112
STARTING THE ENGINE
SHG and LHG Types (long tiller handle) 46
LRG, SRT and LRT Types (remote control) 49
STEERING
SHG and LHG Types (long tiller handle) 58
LRG, SRT and LRT Types (remote control) 58
Steering Friction Adjuster
(SHG and LHG Types) 21
STOPPING THE ENGINE 54
Emergency Engine Stopping 54
Normal Engine Stopping 54
STORAGE 91
Engine oil 93
Fuel 91
PRECAUTIONS 93
SUBMERGED OUTBOARD MOTOR 106

Tachometer [standard equipment (LRTC type)], [optional equipment (other types)] 29
TAKING CARE OF UNEXPECTED PROBLEMS 98
TECHNICAL INFORMATION 108
THE IMPORTANCE OF MAINTENANCE 65
Throttle Friction Adjuster (SHG and LHG Types) 21
Throttle Grip (SHG and LHG Types) 20
Tilt Lever (SHG, LRG and LHG types) 22
Tilt Lock Lever 27
TOOL KIT 67
Transom Angle Adjusting Rod 28
TRANSOM ANGLE ADJUSTMENT 37, 43
TRANSPORTING 95
WITH OUTBOARD MOTOR INSTALLED ON BOAT 95
WITH OUTBOARD MOTOR REMOVED FROM BOAT 96
Trim Meter [standard equipment (LRTC type)], [optional equipment (SRTA and LRTA types)] 29
Trim Tab 28, 61
ADJUSTMENT 70
Warranty Statements 121

MEMO

MEMO

MEMO

HONDA

The Power of Dreams

31ZW2642
00X31-ZW2-6420

EM3

AH 英 AB FM XXX.XXXX.XX
Printed in Japan