OWNER'S MANUAL

HHT25S • HHT35S TRIMMER/ BRUSH CUTTER

Click to Save As

Before operating the trimmer for the first time, please read this Owner's Manual. Even if you have operated other trimmers, take time to become familiar with how this trimmer works and practice in a safe area until you build up your skills.

QUICK FIND

Air Filter 16
Contact Honda 29
Cutting-Line Heads 22
Find a Dealer 29
Fuel 9
Fuel System Maintenance 28
Maintenance Schedule 15
Oil Change 16
Oil Level Check 8
Spark Plug 17
Warranty Coverage 30

CONTENTS

FOR YOUR SAFETY 2
PARTS AND CONTROLS 3
INITIAL TRIMMER SETUP 4
- Importance of Proper Assembly 4
- Tools Required 4
- List of Loose Parts 4
- Install the Handlebar (U-Type) 4
- Add Engine Oil 6
- Before Using Your Trimmer 7

BEFORE EACH OPERATION 7
- Check Your Trimmer 7
- Check Your Trimming Area 7
- Equipment 7
- Check Your Shoulder Harness and Trimmer Adjustment 8
- Check the Engine Oil Level 8
- Add Fuel 9

OPERATION 9
- Safe Trimming Practices 9
- Attachments and Modifications 11
- Operating the Controls 12
- Starting the Engine 13
- Stopping the Engine 13
- Trimmer Operation 14

SERVICING YOUR TRIMMER 15
- Maintenance Safety 15
- Maintenance Schedule 15
- Oil Change 16
- Air Filter 16
- Spark Plug 17
- Spark Arrester 18
- Cooling Fin Inspection 18
- Throttle Cable Inspection 18
- Throttle Cable Adjustment 18

CUTTING ATTACHMENTS 19
- Blades 20
- Debris Shields 21
- Cutting-Line Heads 22

TRANSPORTING 24
- Before Loading 24
- Loading 24

STORAGE 24
- Fuel 24
- Oil 24
- Cleaning 24
- Storage Location 25
- Removing From Storage 25

TROUBLESHOOTING 25
- Engine Will Not Start 25
- Loss of Power or Engine Speed Won't Increase 25
- Cutting-Line Head Won't Stop Turning. 25
- Cutting-Line or Blade Head Won't Turn 25
- Excessive Vibration 25

TECHNICAL INFORMATION 25
- Serial Number Locations 25
- High Altitude Operation 26
- Emission Control System 26
- Air Index 26
- Specifications 27

AVOIDING FUEL-RELATED PROBLEMS 28

CUSTOMER INFORMATION 29
- Parts, Accessories, and Service Items. 29
- Dealer Locator Information 29
- How to Contact Honda 29
- Honda Publications 29

DISTRIBUTOR'S LIMITED WARRANTY. 30

EMISSION SYSTEM WARRANTY 31

PRODUCT REGISTRATION 35

QUESTIONS?

Contact your Honda dealer.

There is a dealer locator at powerequipment.honda.com

00X31VL3 D250

© 2014-2017 American Honda Motor Co., Inc. All Rights Reserved

HONDA Power Equipment

WELCOME

Congratulations on your selection of a Honda trimmer/brush cutter! We are certain you will be pleased with your purchase of one of the finest trimmers on the market. We want to help you get the best results from your new trimmer and to operate it safely. This manual contains information on how to do that; please read it carefully.

When your trimmer needs scheduled maintenance, keep in mind that authorized Honda Power Equipment servicing dealership personnel are specially trained in servicing Honda trimmers and are supported by the parts and service divisions of American Honda.

Please read the *DISTRIBUTOR'S LIMITED WARRANTY* on page 30 and the *EMISSION CONTROL SYSTEM WARRANTY* on page 31 to fully understand what is covered by warranty and your responsibilities of ownership.

FOR YOUR SAFETY

Your safety and the safety of others are very important. We have provided important safety messages in this manual and on the trimmer. This information alerts you to potential hazards that could hurt you or others. Please read these messages carefully.

Of course, it is not practical or possible to warn you about all the hazards associated with operating or maintaining a trimmer. You must use your own good judgment.

Safety Instructions

You will find important safety information in a variety of forms:

- **Safety Labels** – on the trimmer.
- **Instructions** – how to use this trimmer correctly and safely.
- **Safety Messages** – preceded by a safety alert ⚠ symbol and one of three signal words: DANGER, WARNING, or CAUTION.
  Each message tells you what the hazard is, what can happen, and what you can do to avoid or reduce injury.
  These signal words mean:

⚠ DANGER	You **WILL** be KILLED or SERIOUSLY HURT if you don't follow instructions.
⚠ WARNING	You **CAN** be KILLED or SERIOUSLY HURT if you don't follow instructions.
⚠ CAUTION	You CAN be HURT if you don't follow instructions.

- **Damage Prevention Messages** – You will also see other important messages that are preceded by the word NOTICE. This word means:

NOTICE	Your trimmer or other property can be damaged if you don't follow instructions.

⚠ WARNING

The engine exhaust from this product contains chemicals known to the State of California to cause cancer, birth defects, or reproductive harm.

California Proposition 65
This product contains or emits chemicals known to the State of California to cause cancer, birth defects, or other reproductive harm.

The Honda HHT25S and HHT35S trimmer/brush cutters are designed to cut grass, weeds, brush, and/or wood if equipped with an appropriate cutting attachment. Other uses can result in injury to the operator or damage to the trimmer and other property.

These Honda trimmers are intended for use by gardening professionals. Never allow children to operate the trimmer.

Most injuries or property damage can be prevented if you follow all instructions in this manual and on the trimmer. The most common hazards are discussed below, along with the best way to protect yourself and other.

Important Message to Employers

As an employer, you have special responsibilities to the people who work for you.

Before you ask anyone to operate this trimmer, you need to determine whether the person is old enough, large enough, and strong enough to safely handle and control the trimmer.

If you decide the employee is ready, make sure the employee reads and understands all instructions and warnings in this manual and on the labels before operating the trimmer.

Allow adequate time for hands-on training by a qualified instructor, and personally supervise practice sessions until you feel sure the employee is ready to operate the machine.

Also be sure employees wear proper clothing and have eye protection and any other gear that may be required by local ordinances or your insurance company.

Remember, too, that you are responsible for keeping the trimmer properly maintained and in safe operating condition.

Your commitment to safety on the job can help prevent injuries and result in longer and more productive years of service.

Safety Label Locations

These labels warn you of potential hazards that can cause serious injury. Read them carefully. If a label comes off or becomes hard to read, contact an authorized Honda servicing dealer for a replacement.

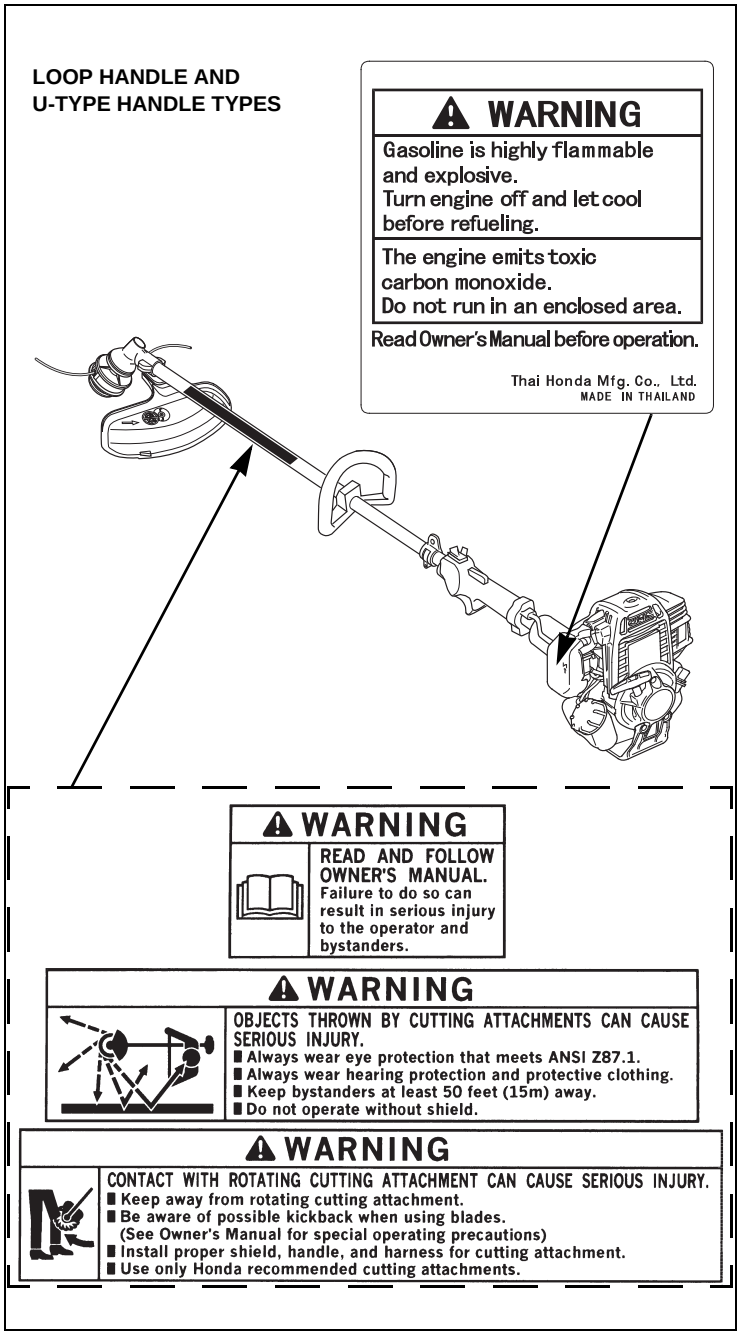

PARTS AND CONTROLS

Loop Type Handle

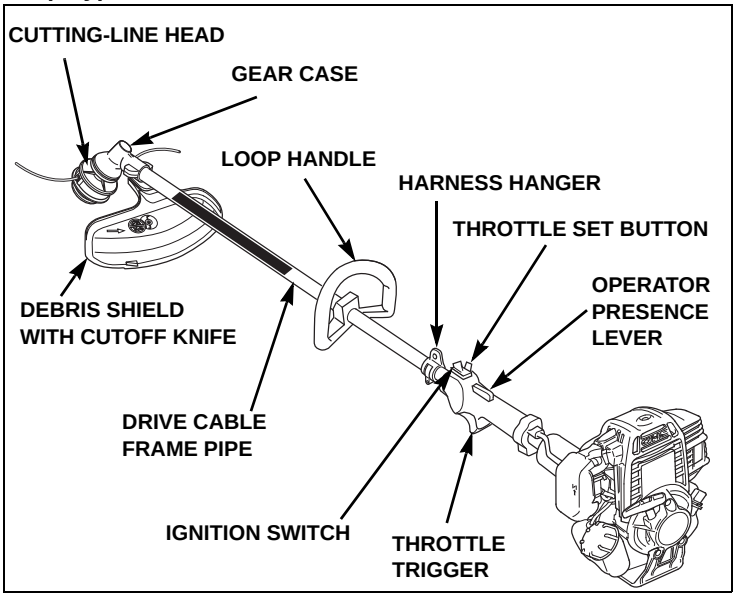

U-Type Handle

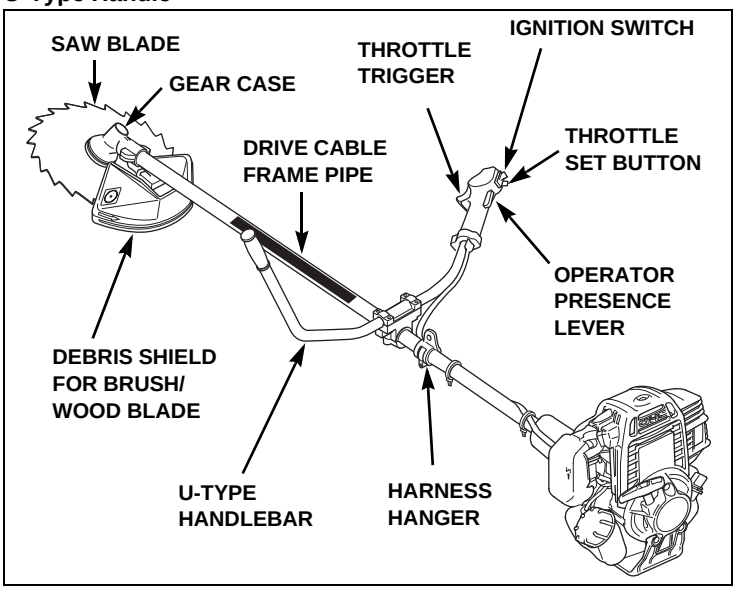

Engine

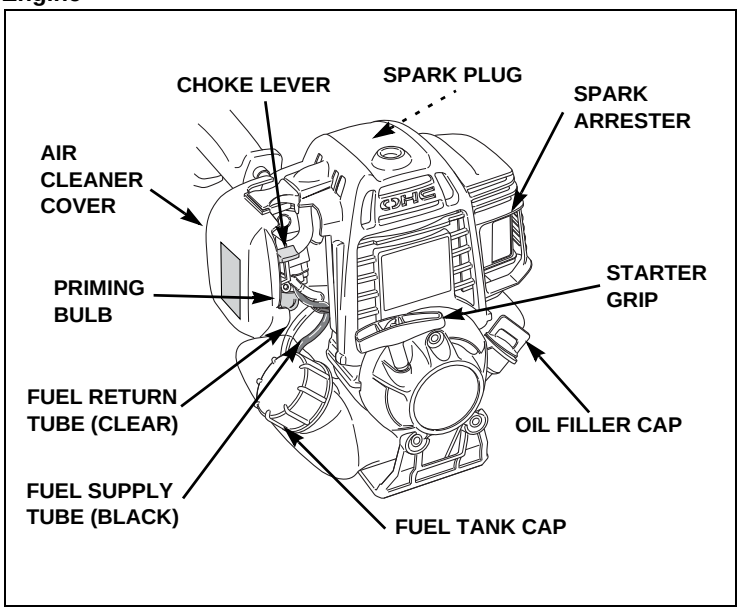

INITIAL TRIMMER SETUP

Importance of Proper Assembly

Proper assembly is essential to operator safety and the reliability of the machine. Any error or oversight made by the person assembling and servicing a machine can result in faulty operation, damage to the machine, or injury to the operator.

⚠ WARNING

Improper assembly can cause an unsafe condition that can lead to serious injury or death.

Follow the procedures and precautions in the assembly instructions carefully.

Tools Required

4 mm hex wrench

8 and 17 mm sockets

0 - 25 ft-lb torque wrench

List of Loose Parts

Carefully remove the trimmer and loose parts from the carton and compare the loose parts against the following list. Contact the authorized Honda dealer from whom you purchased the trimmer if any of the loose parts shown are not included with your trimmer.

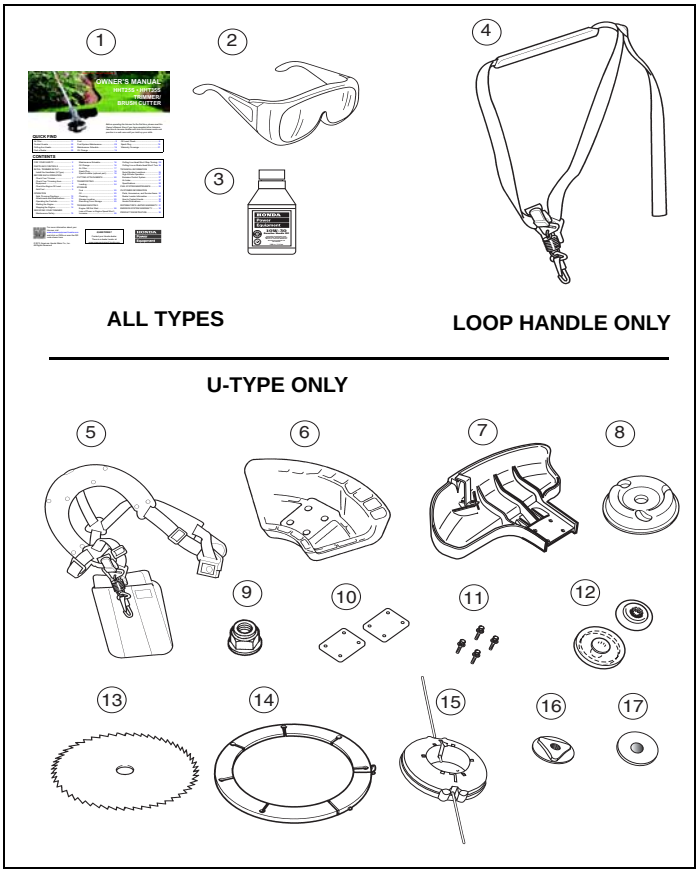

Ref. No	Description	Loop handle	U-type handlebar	Qty.
1	Owner's Manual	•	•	1
2	Goggles	•	•	1
3	Bottle of oil	•	•	1
4	Single-strap shoulder harness	•		1
5	Full shoulder harness		•	1
6	Brush/wood debris shield		•	1
7	Cutting-line debris shield		•	1
8	Cover		•	1
9	10 mm lock nut		•	1
10	Spacer		•	2
11	5 x 28 mm bolt		•	4
12	Spacer set (A & B)		•	1
13	Brush/wood saw blade (50-tooth/10 in)		•	1
14	Blade cover		•	1
15	Kwik Loader® head		•	1
16	Collar		•	1
17	Washer		•	1
	Trimmer line (0.095 x 8 inch long)		•	2

Install the Handlebar (U-Type)

1. Remove the four 5 x 28 mm bolt/washers and handlebar holder A.

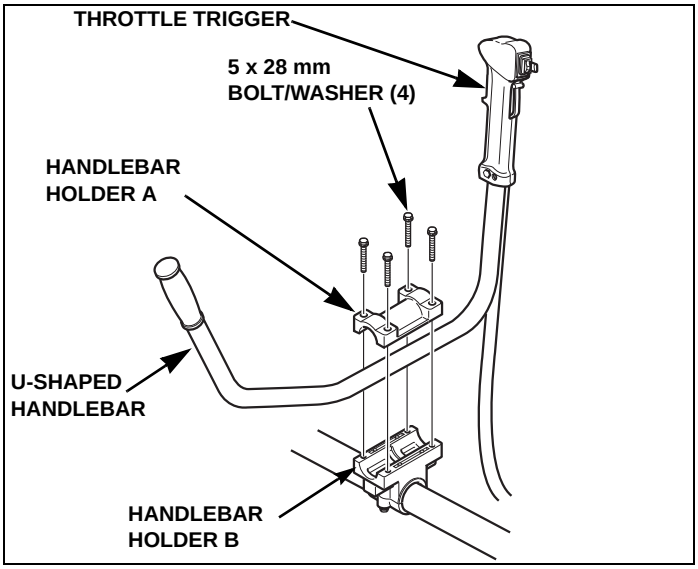

2. Set the U-shaped handle into handlebar holder B with the throttle trigger facing to the right.
3. Adjust the handlebar position as shown.

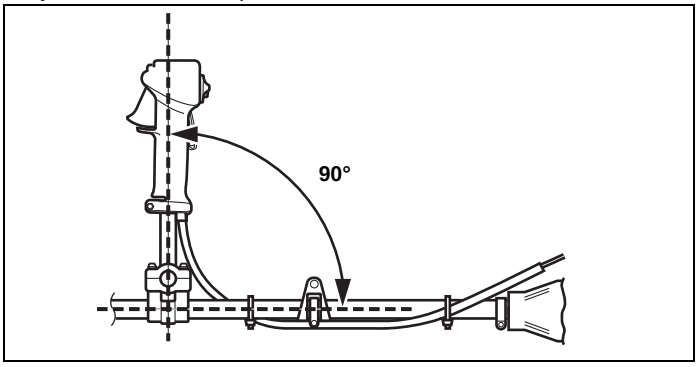

4. Tighten the four 5 x 28 mm bolt/washers.

   TORQUE: 3.6 ft-lb (5 N•m)

5. Make sure the tie straps are positioned as shown.

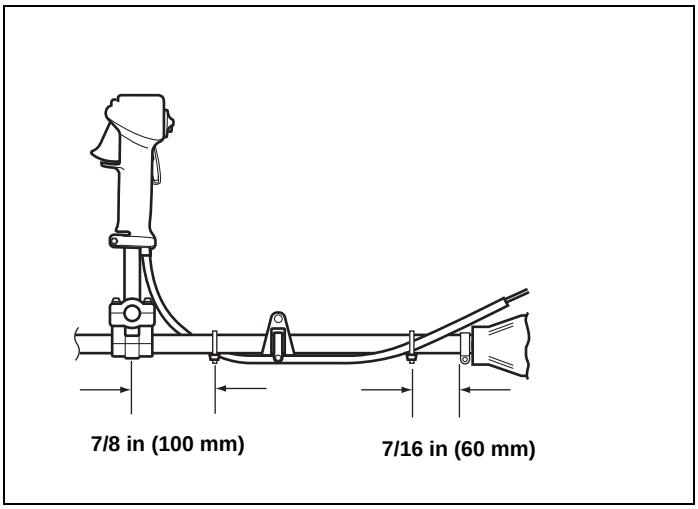

6. Operate the throttle trigger and make sure the throttle operates smoothly.

Kwik Loader® Shield and Head Installation

Prior to installation, move the ignition switch to the STOP (O) position.

1. Install the cutting-line head debris shield as shown below.
2. Tighten the 5 x 28 mm bolt/washers:

   TORQUE: 2.5 ft-lb (3.4 N•m)

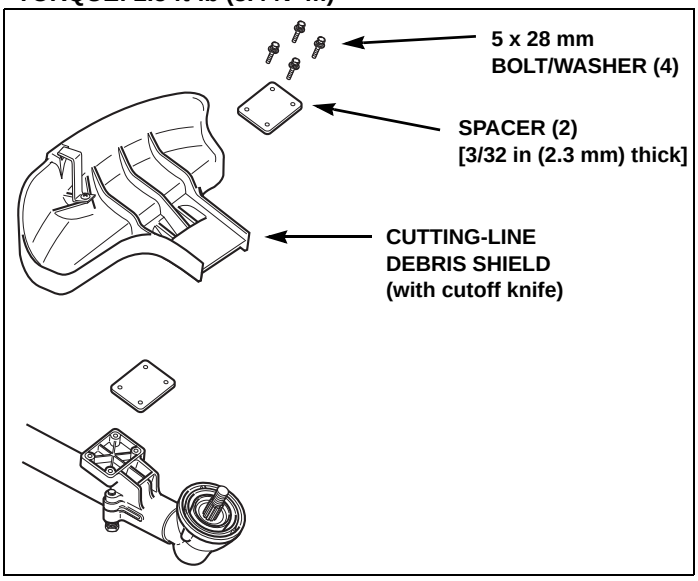

3. Position cover plate/spacer A, spacer B, and washer on the shaft as shown.
4. Insert the tip of a 4 mm hex wrench or equivalent fully into the gear case hole and verify that the output shaft will not turn.
5. Position the Kwik-Loader trimmer head against the washer and thread the collar onto the shaft making sure to seat the triangular portion of the collar in the triangular opening in the trimmer head.
6. Grasp the trimmer head and tighten it by hand in the direction shown.
7. Remove the 4 mm hex wrench from the gear case hole.

All output shafts use left-hand threads.

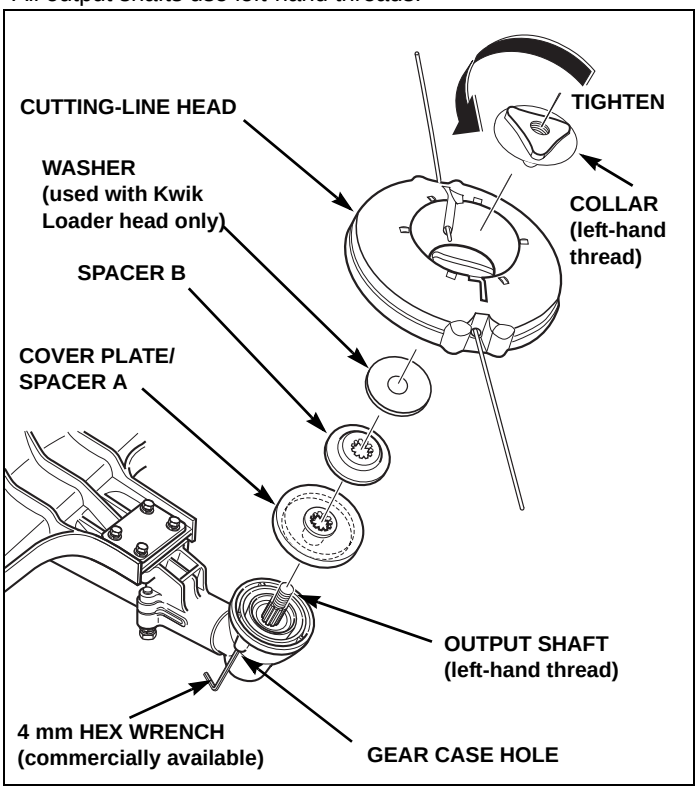

Brush/Wood (50-tooth) Shield and Head Installation

Prior to installation, move the ignition switch to the STOP (O) position and disconnect the spark plug cap from the spark plug. Wear protective gloves when working around the cutting-line head and saw blade.

1. Install the brush/wood blade debris shield as shown below.
2. Tighten the 5 x 28 mm bolt/washers:

   TORQUE: 2.5 ft-lb (3.4 N•m)

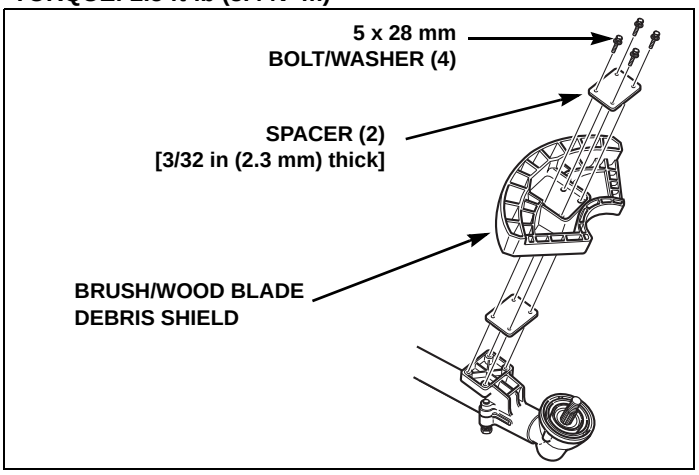

3. Insert a 4 mm hex wrench or equivalent into the gear case hole to prevent the output shaft from turning.

4. Install cover plate/spacer A onto the output shaft as shown.

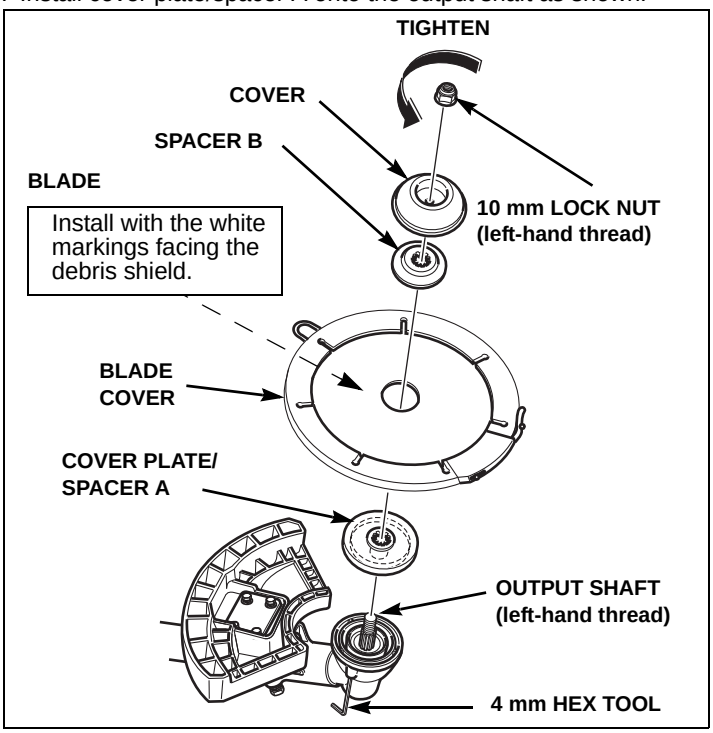

5. With the blade cover installed on the blade, install the blade by aligning the center of the blade with the shoulder on cover plate/ spacer A.
6. Install spacer B, the cover, and the 10 mm lock nut as shown.

   Be sure to install the blade with the cutting edges of the saw teeth in the direction of rotation; the side with the white markings must face the debris shield.

   The output shaft has left-hand threads. Tighten the 10 mm lock nut counterclockwise.

   TORQUE: 14 ft-lb (20 N•m)
7. Remove the 4 mm hex wrench or equivalent from the gear case.

Blade Cover Removal

1. Turn the blade cover slowly until the cover latch is clear of the debris shield.

   Unfasten the latch by lifting the tab off the post.
2. Pull the post end away from the blade and set it on top of the blade as shown.

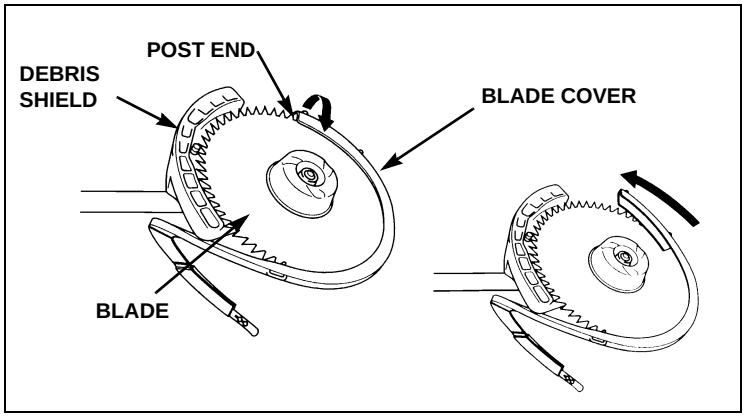

3. Turn the blade cover slowly until the post end is clear of the debris shield, then remove the blade cover from the blade.

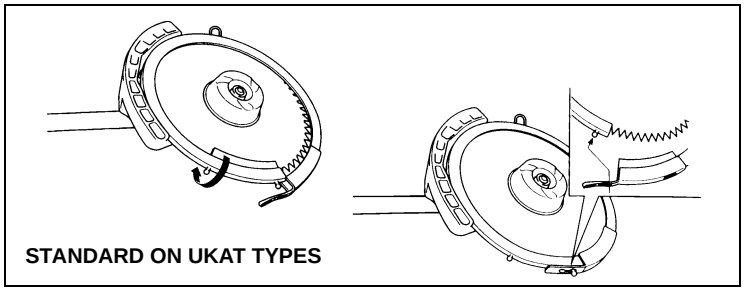

Blade Cover Installation

1. Install the blade cover over the blade so that half of the blade is covered.

   To prevent the post end from interfering with the debris shield, pull the post end away from the blade and set it on top of the blade as shown above.
2. Turn the blade cover slowly until the post end clears the debris shield.
3. Reposition the post end over the blade.
4. With the blade cover fully seated on the blade, latch the tab over the post.

Add Engine Oil

The trimmer is shipped **WITHOUT OIL** in the engine.

Place the trimmer on a level surface, and then remove the oil filler cap/dipstick.

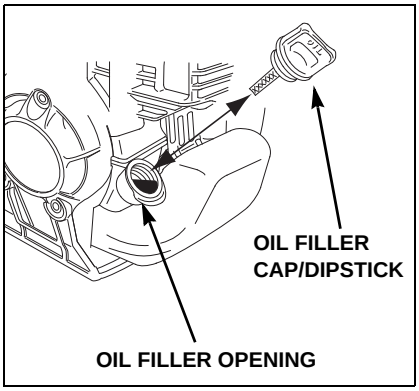

A bottle of oil is included in the box with your trimmer. Add the entire contents of the oil bottle into the oil filler opening.

All Honda engines are run at the factory prior to packaging. Most of the oil is removed prior to shipment; however, some oil remains in the engine. The amount of oil left in the engine varies.

If not using the supplied oil, add enough recommended oil (page 16) to bring the oil level to the bottom edge of the oil filler hole.

Do not overfill the engine with oil, as the oil tank capacity is small.

NOTICE

Running the engine with too little or too much oil can cause engine damage. This type of damage is not covered by the DISTRIBUTOR'S LIMITED WARRANTY (page 30).

Screw in the oil filler cap/dipstick securely.

Please Register Your Trimmer

Please take a few minutes and register your purchase with Honda.

You can register by completing and mailing the registration card on the back cover of this book or going online to powerequipment.honda.com and clicking on Product Registration.

Before Using Your Trimmer

Before using the trimmer, all operators must read the following sections:

- **FOR YOUR SAFETY** (page 2)
- **PARTS AND CONTROLS** (page 3)
- **BEFORE EACH OPERATION** (page 7)
- **OPERATION** (page 9)
- **MAINTENANCE SCHEDULE** (page 15)

BEFORE EACH OPERATION

Your safety is your responsibility. A little time spent in preparation will significantly reduce your risk of injury. Read and understand this manual. Know what the controls do and how to operate them.

Familiarize yourself with the trimmer and its operation before you begin using it. Know how to quickly shut off the engine in case of an emergency.

Check Your Trimmer

For your safety, to ensure compliance with environmental regulations, and to maximize the service life of your trimmer, it is very important to take a few moments before you operate the trimmer to check its condition. Be sure to take care of any problem you find, or have your servicing dealer correct it, before you operate the trimmer.

On blade equipped models, always remove the blade cover before starting the engine. If the cover is not removed, the blade cover may fly off at high speed during test operation. Reinstall the blade cover when the trimmer is not being used.

⚠ WARNING

Improperly maintaining this trimmer, or failing to correct a problem before operation, could cause a malfunction.

Some malfunctions can seriously hurt or kill you.

Always perform a pre-operation inspection before each operation, and correct any problem.

- Look around the engine for signs of oil or gasoline leaks
- Look for signs of damage
- Check the throttle cable free play (page 18)
- Check that all nuts, bolts, and screws are tightened
- Check the air filter (page 16) and oil level (page 8)
- Check the fuel level (page 9). Starting with a full tank will help to eliminate or reduce operating interruptions for refueling.
- If using a metal blade on a loop handle trimmer, be sure the barrier bar (optional part) is installed beneath the loop handle
- Check that the debris shield is the correct shield for the cutting attachment (page 21)

Check Your Trimming Area

Objects thrown by the trimmer can cause serious injury. Before operating the trimmer, carefully inspect the area and remove all objects that could be thrown by, or entangled in, the cutting attachment, such as rocks, broken glass, nails, wire, or string.

Clear the area of children, bystanders, and pets. Keep all children, bystanders, and pets at least 50 feet (15 meters) away from where the trimmer is being operated.

Even outside a 50-foot (15-meter) radius of the trimmer, there may be a risk of injury from thrown objects, so bystanders should be encouraged to wear eye protection.

If anyone approaches you while you are operating the trimmer, release the throttle trigger and stop the engine.

Equipment

The Honda HHT25S and HHT35S trimmer/brush cutters are supplied with a shoulder harness and safety glasses. Refer to page 7 for a description of other equipment and protective clothing you will need.

Shoulder Harness

A full shoulder harness must be worn by the operator of these Honda trimmers/brush cutters when equipped with a blade and debris shield. If the trimmer is equipped with a cutting-line head and shield with cutoff knife, the operator may wear a single-strap harness.

A suitable shoulder harness is supplied with each new Honda HHT25S and HHT35S trimmer/brush cutter. Replacement shoulder harnesses may be purchased through any authorized Honda trimmer/brush cutter servicing dealer.

Before operation, adjust your shoulder harness as described on page 8.

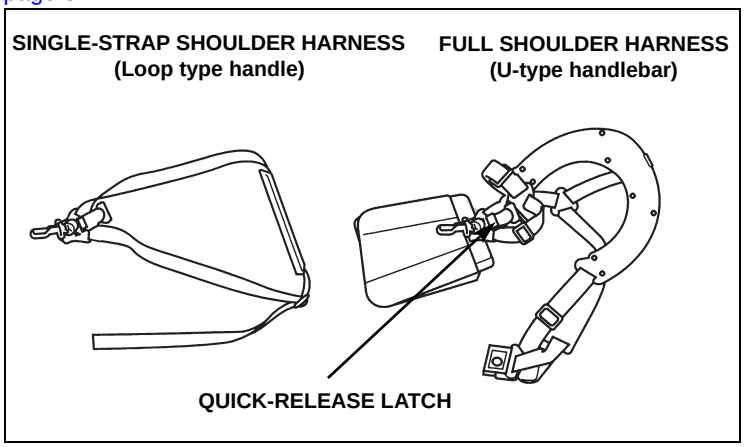

Quick-Release Latch

The shoulder harnesses supplied with these trimmers are equipped with a quick-release latch.

Pull the latch tab upward to detach the trimmer from the harness.

Insert the latch tongue in the slot of the quick-release latch to reattach the trimmer to the harness.

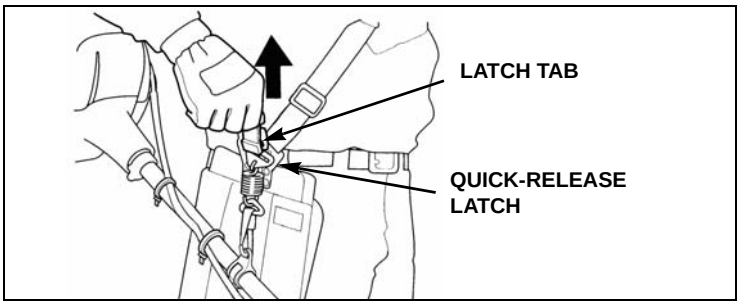

Safety Glasses

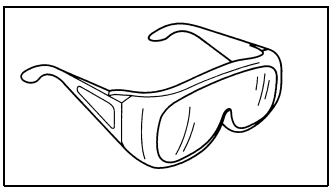

Safety glasses or goggles that comply with ANSI (American National Standards Institute) standard Z87.1 must be worn by the operator of any Honda trimmer/brush cutter. The safety glasses supplied with each new Honda HHT25S and HHT35S trimmer/brush cutter comply with this ANSI standard.

Check Your Shoulder Harness and Trimmer Adjustment

Adjusting the Harness

Adjust the harness so the quick-release latch is at your right hip, as shown.

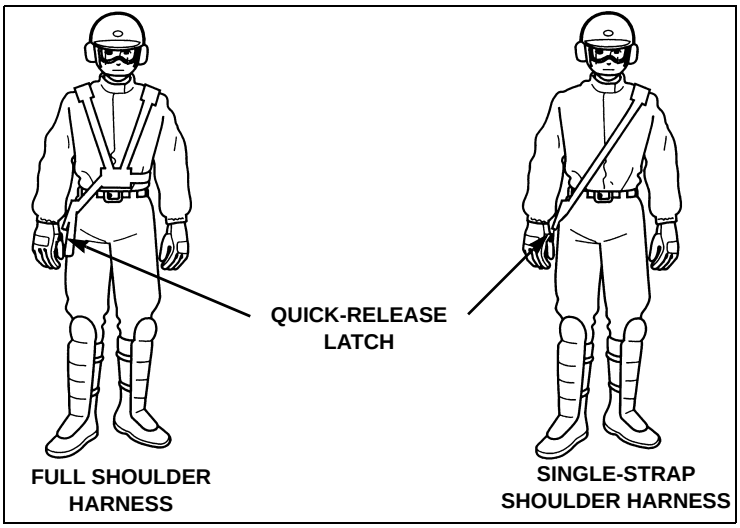

Balancing the Trimmer on the Shoulder Harness

Hang the trimmer on the harness hook, and see how it balances.

Adjust the shoulder harness, the harness hanger on the frame pipe, and the loop handle or U-type handlebar, so the handle or handlebars are in a comfortable operating position, and the trimmer hangs with its cutting attachment a few inches above the ground (see page 14).

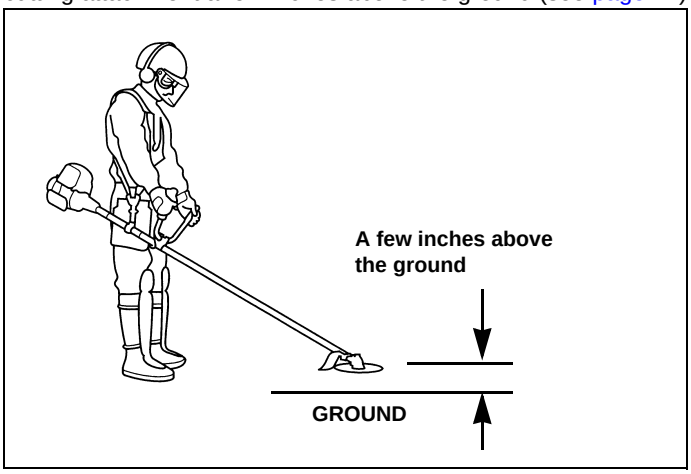

Check the Engine Oil Level

Check the engine oil level before each use, or every 10 hours if operated continuously. Rest the trimmer on a level surface with the engine stopped.

1. Rest the trimmer on a level surface as shown.
2. Remove the oil filler cap/dipstick and wipe it clean.

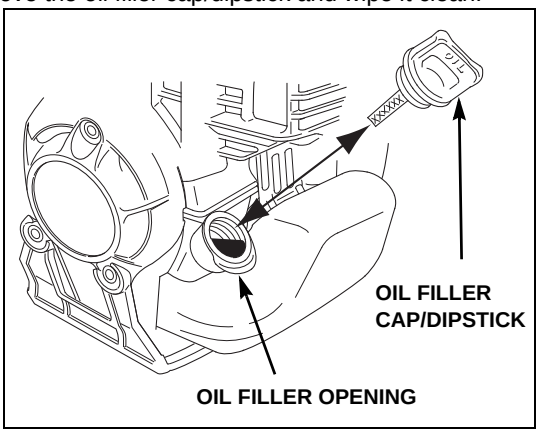

3. Insert and remove the dipstick **without screwing it into the filler opening**. Check the oil level shown on the dipstick.
4. If the oil level is low, fill to the edge of the oil filler hole with the recommended oil. Avoid overfilling or underfilling, as the oil capacity is small. Be sure the engine is in a level position, as shown.

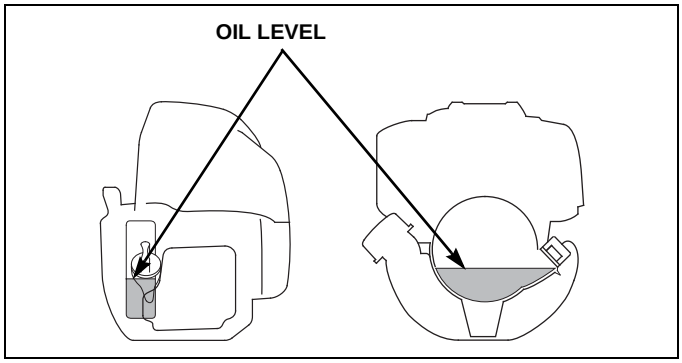

NOTICE

Running the engine with a low oil level can cause engine damage. This type of damage is not covered by the DISTRIBUTOR'S LIMITED WARRANTY (page 30*).*

5. Screw in the oil filler cap/dipstick securely.

Add Fuel

This engine is certified to operate on regular gasoline with a pump octane rating of 86 or higher.

Never use stale or contaminated gasoline or an oil/gasoline mixture. Avoid getting dirt or water in the fuel tank.

You may use regular unleaded gasoline containing no more than 10% ethanol (E10) or 5% methanol by volume. In addition, methanol must contain cosolvents and corrosion inhibitors.

Use of fuels with content of ethanol or methanol greater than shown above may cause starting and/or performance problems. It may also damage metal, rubber, and plastic parts of the fuel system.

Engine damage or performance problems that result form using a fuel with percentages of ethanol or methanol greater than shown above are not covered under warranty.

⚠ WARNING

Gasoline is highly flammable and explosive, and you can be burned or seriously injured when refueling.

- Stop the engine and let cool before refueling.
- Keep heat, sparks, and flame away.
- Refuel only outdoors.
- Wipe up spills immediately.

NOTICE

If your equipment will be used on an infrequent or intermittent basis, (more than 4 weeks before next use), refer to "AVOIDING FUEL-RELATED PROBLEMS" on page 28 *for information regarding fuel deterioration.*

1. To refuel, set the trimmer on level ground and remove the fuel tank cap.

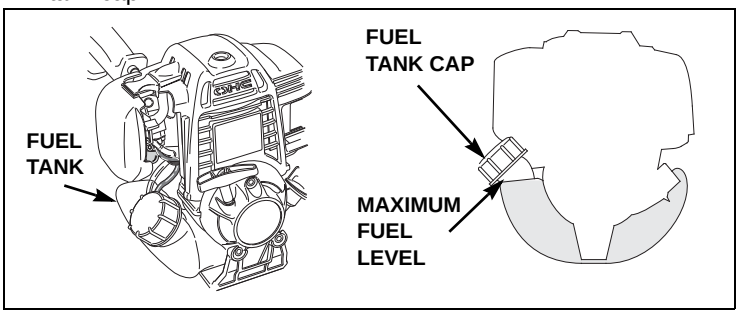

2. Fill the tank with gasoline to the shoulder of the filler neck.
3. Refuel carefully to avoid spilling fuel. Do not overfill.
4. After refueling, tighten the fuel tank cap securely.

   Never refuel the engine inside a building where gasoline fumes may reach flames or sparks. Keep gasoline away from appliance pilot lights, barbecues, electric appliances, power tools, etc.

   Spilled fuel is not only a fire hazard, it causes environmental damage. Wipe up spills immediately

   Move the trimmer at least 10 feet (3 meters) away from the fueling source and site before starting the engine.

   NOTICE

   Fuel can damage paint and plastic. Be careful not to spill fuel when filling your fuel tank. Damage caused by spilled fuel is not covered by the DISTRIBUTOR'S LIMITED WARRANTY *(*page 30*).*

OPERATION

For your safety, avoid starting or operating the engine in an enclosed area, such as a garage. Your trimmers exhaust contains poisonous carbon monoxide gas, which can collect rapidly in an enclosed area and cause illness or death.

⚠ WARNING

Exhaust contains poisonous carbon monoxide gas that can build up to dangerous levels in closed areas.

Breathing carbon monoxide can cause unconsciousness or death.

Never run the trimmer in a closed, or even partially closed area where people may be present.

If the trimmer starts to shake or vibrate, stop the engine immediately. After the cutting head has completely stopped, inspect it to determine the cause of the vibration. Sudden vibration is a sign of a hazardous problem, such as a loose or damaged blade. Do not operate the trimmer until the problem is corrected.

Prolonged exposure to vibration may cause Hand-Arm Vibration Syndrome (HAVS). Symptoms include loss of skin color in the hands and numbness or a painful tingling sensation in the fingers, hands, and arms. Regular users of any power equipment may feel the numbness or pain spontaneously, at any time, not just after using the equipment. If any of these symptoms occur, see a physician immediately.

Safe Trimming Practices

Honda trimmers are designed to give safe and dependable service if operated according to instructions and intended use.

Honda trimmers are intended to be used by an experienced, trained operator who is familiar with the use of power equipment. Do not allow a child or an inexperienced, untrained operator to use this trimmer. Operating this equipment requires special effort on your part to ensure your safety and the safety of others. Read and understand this owner's manual.

Always Wear Eye Protection and Protective Clothing

- The most frequent injuries associated with string trimmers are eye injuries caused by thrown debris. Always wear safety glasses or goggles that meet the ANSI Z87.1 rating whenever you use the trimmer.
- The operator must wear hearing protectors when using this trimmer. Hearing protectors will protect the operator's ears from noise damage.
- Wearing protective clothing also reduces the risk and severity of injury from thrown debris or contact with the cutting attachment. Wear the trimmer harness, gloves, a long-sleeved shirt, long pants, and sturdy boots with nonslip soles.

Keep Away From Cutting Lines and Blades

- A spinning cutting blade can cut through your clothes and skin just as easily as it cuts through grass and dirt. Keep all parts of your body away from a spinning cutting attachment.
- Even after the engine has stopped, the cutting attachment will spin for several seconds. Do not touch it until it has stopped spinning, or you may get cut.

Turn the Engine Off When Not Trimming

If you stop trimming or cutting for any reason, even to clean off the cutting attachment, always shut off the engine.

Keep People Away From Your Working Area

To prevent injury to others, keep people at least 50 feet (15 meters) away from the working area during operation.

Always Wear the Harness When Trimming

The harness keeps the trimmer away from your body, lowering your chances of being cut by the trimmer's blade or cutting line.

Read This Manual Before Using the Trimmer

Read the manual before operating the trimmer. Understand how to use all the controls and obey all warnings.

Clear the Working Area First

Objects thrown by the trimmer can cause serious injury. Before operating the trimmer, carefully inspect the area and remove any broken glass, pieces of wire, and other loose objects.

Keep the Trimmer Properly Maintained

- The cutting attachment should be examined for looseness, cracks, broken parts, or excessive wear. Tighten or replace as needed before operating the trimmer.
- Do not operate the trimmer without a debris shield properly installed. Make sure you have the right shield installed for your cutting attachment.

Cutting Terrain

Be very careful when operating the trimmer over uneven or rough ground, and when the ground is wet and slippery. Watch out for hidden obstacles that could cause you to stumble. Operate the trimmer only under conditions with good visibility. Do not operate the trimmer where you cannot see what it is cutting.

⚠ WARNING

Rotating cutting lines can cause serious abrasions and cuts, and blades can cut deeply.

Keep away from the cutting lines or blade whenever the engine is running.

Always stop the engine, and be sure the cutting line head or blade has stopped turning, before inspecting or handling the cutting lines or blade.

Thrown Debris

The trimmer will throw debris in the direction of blade movement at the point of contact.

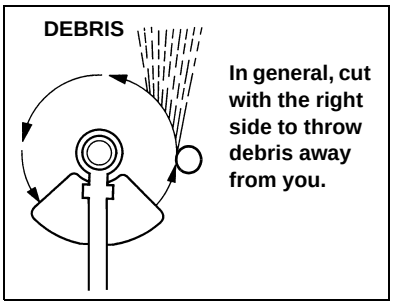

The cutting line head or blade rotates counterclockwise, as viewed from the operator's position. Tilting the cutting line head to the right will throw debris away from you, and tilting to the left will throw debris toward you.

If the cutting line head or blade is held parallel to the ground, debris will scatter in all directions and there will be greater friction, which will wear out the cutting line or blade sooner.

When operating the trimmer near a hard surface such as a wall, work from an angle where debris that strikes the hard surface will ricochet away from you.

Gravel, loose stones, etc. can be picked up by the nylon cutting lines or blade and thrown many feet with enough force to cause serious personal injury and/or property damage. Before crossing graveled areas, release the throttle trigger to stop the cutting line head or blade.

Blade Thrust (Kickback)

Blade thrust (kickback) is the sudden, forceful, and uncontrolled movement of a blade-equipped trimmer that may occur if the blade binds while cutting or strikes a solid object.

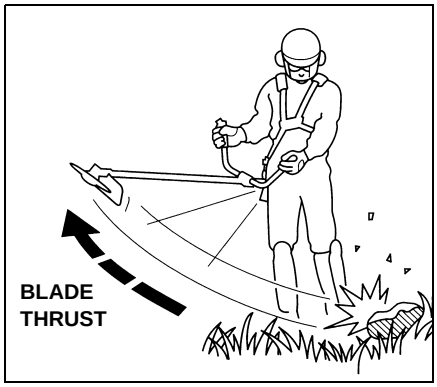

Blade thrust (kickback) throws the trimmer in the direction opposite blade rotation at the point of contact, and the jolt received by the operator can result in further loss of control.

To reduce the risk of loosing control, use metal blades on trimmers equipped with a U-type handlebar, or install the barrier bar (optional part) on trimmers equipped with a loop handle.

Replace or resharpen dull blades. Dull blades are more likely to bind and cause blade thrust.

Watch out for hidden obstacles such as rocks, stumps, roots, etc., that could cause the blade to kick back if struck. Blade thrust is more likely to occur in areas where it is difficult to see what is being cut.

Understand the reaction forces of the blade. Blades on Honda HHT25S and HHT35S trimmers rotate counterclockwise, as viewed from the operator's position. Therefore, the left side of the blade is moving toward you. With these trimmers, when using a brush blade to saw through heavy brush and small saplings, sawing with the left side of a brush blade will give you better control and less risk of kickback, though it will throw the sawdust toward you.

Cut from the side of saplings that will cause them to fall away from the trimmer. This will help prevent the blade from binding in the cut and kicking back.

Accelerate the engine to maximum speed before starting the cut, and saw through with uniform pressure.

OPERATING TIPS

Scything Motion

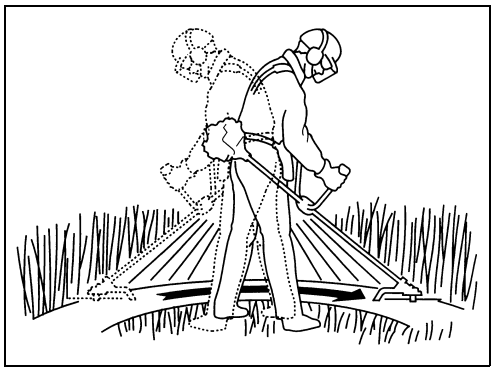

Swing the trimmer in a level arc by rotating your body with a smooth, easy motion, rather then moving the trimmer with your arms. Do not chop at tough weeds and brush; let the cutting line or blade work through tough growths gradually.

To direct thrown debris away from you, tilt the cutting attachment to the right side, scythe from left to right, then return without cutting.

Trimming and Edging

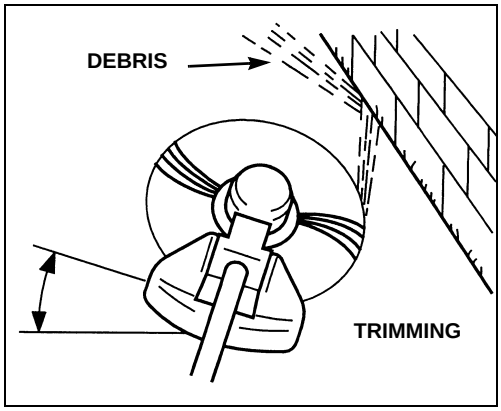

Use nylon line for cutting against a hard surface. Work from an angle where debris that strikes the hard surface will ricochet away from you.

Avoid contact with wires, wire fences, metal rods, etc. Overlapping a wire will cause the nylon line to wrap around the wire and break off.

Brush Clearing

Clearing brush with a brush blade may require both scything and sawing.

Scything with the right side of the blade will direct thrown debris away from you.

Be especially careful to direct debris away from you if recutting an area to shorten stumps. Short lengths of shrub and sapling stumps may tear off and be thrown at high speed.

Sawing heavy brush and saplings with the left side of the blade will reduce the risk of kickback.

Accelerate the engine to maximum speed before starting the cut, and saw through with uniform pressure.

If shrubs or saplings bind the blade, stop the engine and, while supporting the weight of the trimmer, push the shrub or sapling away to free the blade. Do not use the blade as a lever.

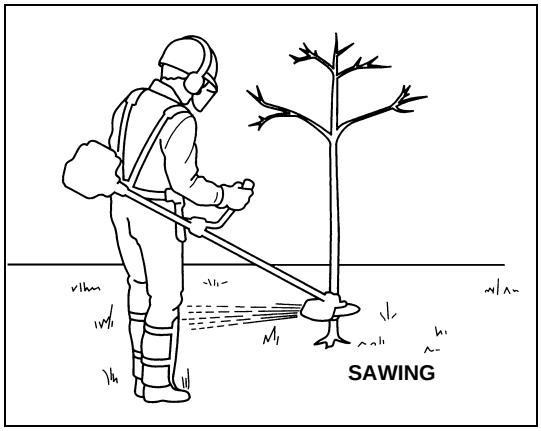

Operation on Slopes

Start on the low side of a slope, and work upward. This will reduce your risk of slipping and falling, and it will give you a cutting angle that will better enable you to direct debris away from you.

Do not let the cutting line or blade dig into the slope, because that can cause stones and dirt to be thrown at you.

Do not raise the cutting attachment above waist level during operation, because that would increase the risk of thrown objects striking your face.

Avoid steep slopes that would require holding the cutting attachment above waist level. Avoid slippery slopes that might cause you to lose your balance.

Attachments and Modifications

Modifying your trimmer/brush cutter, or installing non-Honda attachments, can make your trimmer unsafe. Before you make any modifications or install any attachments, be sure to read the following information.

Attachments

Your Honda trimmer servicing dealer has cutting attachments, debris shields, barrier kits, and shoulder harnesses that have been designed and approved for your trimmer and are covered by warranty. See *CUTTING ATTACHMENTS* (page 19).

Non-Honda attachments are usually designed for universal applications. Although aftermarket attachments may fit on your trimmer, they may not meet factory specifications and could make your trimmer unsafe.

Modifications

Do not remove the debris shield or modify your trimmer in any way that would alter its design or operation. This could make your trimmer unsafe.

Operating the Controls

The location and operation of the controls are similar on both the HHT25S and HHT35S models.

Choke Lever

The choke lever opens and closes the choke valve.

The CLOSED position enriches the fuel mixture for starting a cold engine.

The OPEN position provides the correct fuel mixture for operation after starting, and for restarting a warm engine.

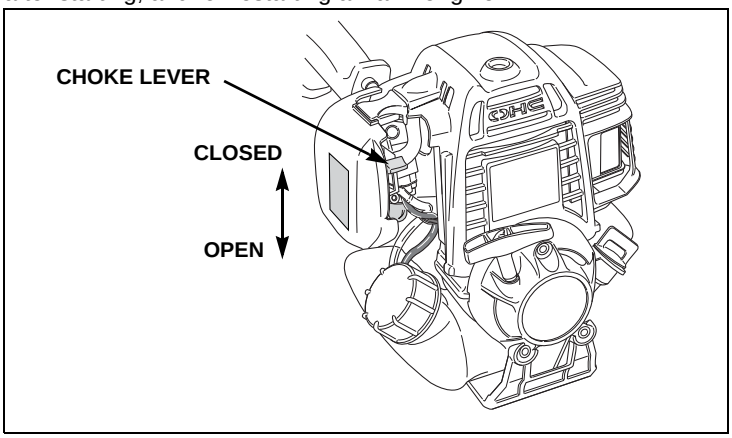

Ignition Switch

The ignition switch controls the ignition system.

The ignition switch must be in the ON (I) position for the engine to start and run.

Moving the ignition switch to the STOP (O) position stops the engine.

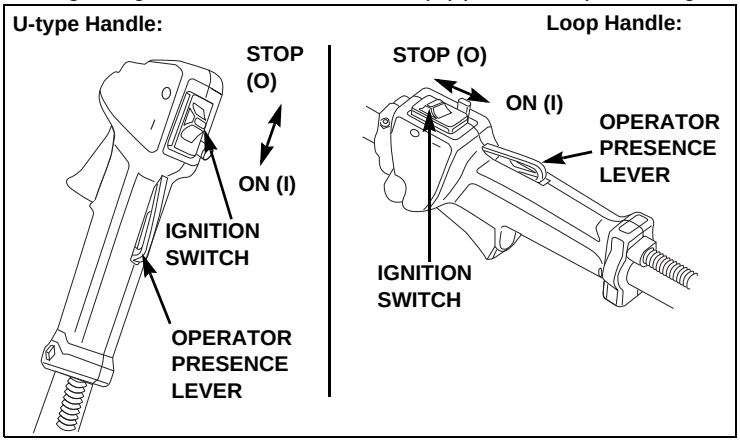

Operator Presence Lever

The operator presence lever blocks the throttle trigger. This safety feature prevents unintentional throttle operation if the trimmer is bumped while the operator's hand is not on the control handle.

When the operator presses the presence lever by gripping the control handle, the trigger moves freely.

Throttle Trigger

The throttle trigger controls engine speed.

Pulling the throttle trigger toward the control handle grip increases engine speed. The trimmer will have the greatest cutting force at maximum engine speed.

Releasing the throttle trigger reduces engine speed. At idle, the cutting attachment should coast to a stop.

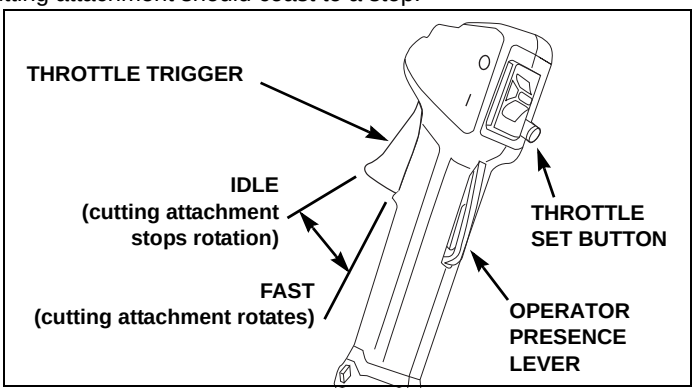

Throttle Set Button

The throttle set button is used to hold the throttle trigger at the fast idle position for starting. Do not allow the cutting line or blade to contact any obstruction when starting the engine with the throttle set button engaged.

To engage the throttle set button, press the operator presence lever by gripping the control handle, pull the throttle trigger, then press and hold the throttle set button while releasing the throttle trigger.

To disengage the throttle set button, simply pull the throttle trigger. The throttle set button automatically disengages when the throttle trigger is pulled.

Do not use the throttle set button while operating the trimmer. The trimmer will not return to idle, and the cutting-line head or blade will continue to spin until the throttle set button is disengaged and the throttle trigger is released.

Priming Bulb

Pressing the priming bulb pumps fuel from the fuel tank to the carburetor. This procedure is necessary for starting the engine.

To ensure fuel has reached the carburetor, press the priming bulb repeatedly until fuel can be seen in the clear plastic fuel return tube.

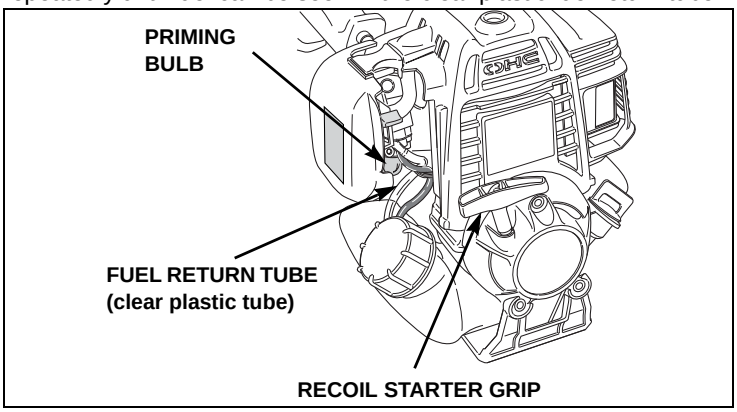

Starting the Engine

1. To start a cold engine, move the choke lever to the CLOSED position.

   To restart a warm engine, leave the choke lever in the OPEN position.

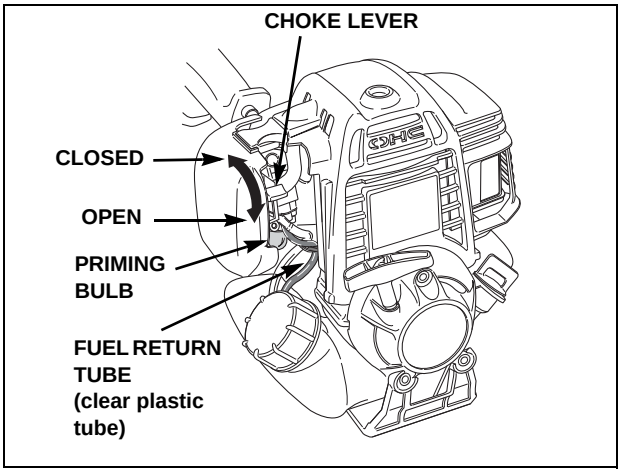

2. To start a cold engine, or after refueling an engine that has run out of fuel, press the priming bulb repeatedly until fuel can be seen in the clear plastic fuel return tube.

   To restart a warm engine that has not run out of fuel, it is not necessary to press the priming bulb.

3. Set the throttle trigger in the starting position, using the throttle set button.

   To set the throttle trigger for starting, press the operator presence lever by gripping the control handle, pull the throttle trigger, then press and hold the throttle set button while releasing the throttle trigger.

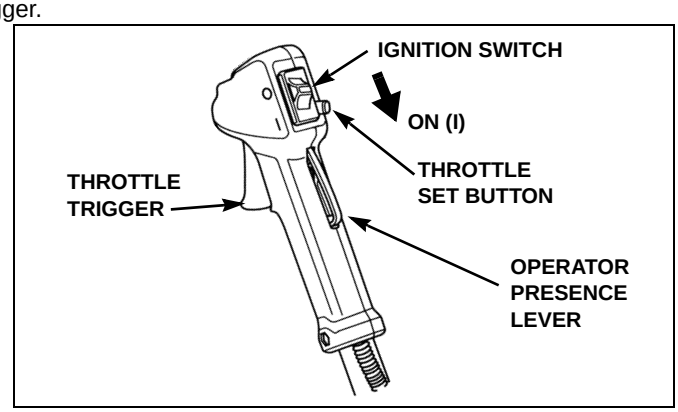

4. Move the ignition switch to the ON (I) position.

5. Set the trimmer on the ground, resting on the debris shield and the fuel tank guard. Do not allow the cutting-line or blade to contact any obstruction.

   Always rest the trimmer on the ground for starting, rather than holding it in the operating position. This prevents the end of the trimmer from swinging into something as you start the engine.

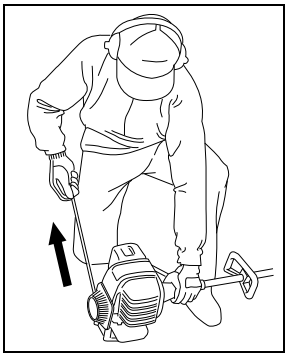

6. With your left hand, hold the frame pipe just ahead of the engine. With your right hand, pull the starter grip lightly until you feel resistance, then pull briskly. Return the starter grip gently.

7. If the choke lever was moved to the CLOSED position to start the engine, gradually move it to the OPEN position as the engine warms up.

   Allow the engine to warm up for a few minutes after a cold start. When the engine is warm enough to idle well, pull and release the throttle trigger to disengage the throttle set button.

8. With the engine idling, hook the trimmer to your shoulder harness. Be careful to avoid contact with the cutting-line head or blade while handling the trimmer with the engine running.

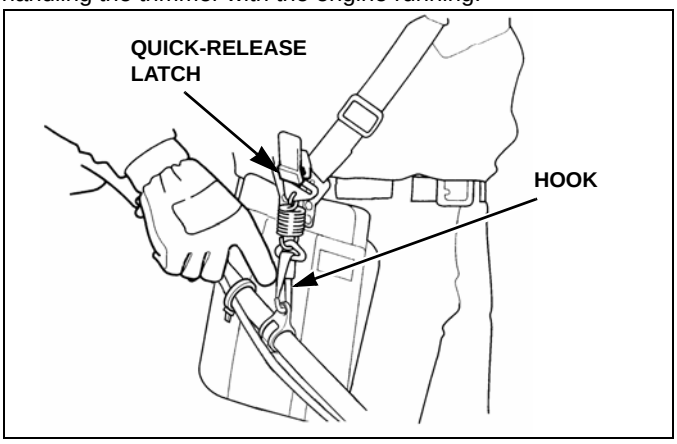

The cutting-line head or blade should not rotate with the engine idling. If there is rotation at idle, adjust the idle speed correctly before using the trimmer. For idle adjustment, consult your authorized Honda servicing dealer.

Stopping the Engine

1. Release the throttle trigger.

2. Move the ignition switch to the STOP (O) position.

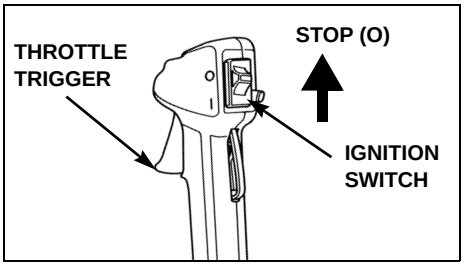

   Wait for the cutting line head or blade to stop before allowing the end of the trimmer to contact anything.

⚠ WARNING

The blade will continue to spin briefly after the engine has stopped or the throttle trigger is released.

A coasting blade can cause injury.

Maintain proper control of the trimmer until the blade has completely stopped rotating.

Harness Quick Disconnect

To quickly detach the trimmer from the harness, pull the quick-release latch tab upward.

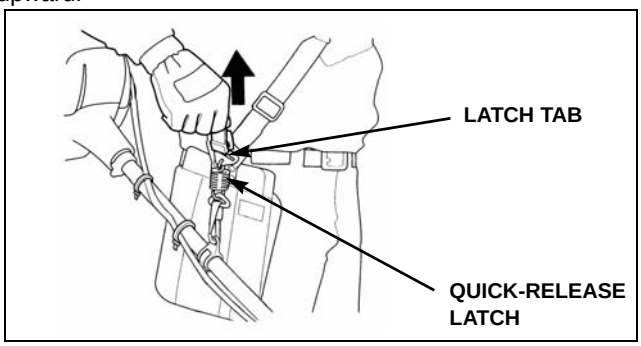

Insert the latch tongue in the slot of the quick-release latch to reattach the trimmer to the harness.

Trimmer Operation

Operating Position

Hold the trimmer firmly with both hands, with your fingers and thumbs encircling the handles as shown. This will help you to keep the trimmer under control at all times.

- Keep firm footing and balance.
- Do not overreach.
- Keep the cutting attachment below waist level.
- Keep all parts of your body away from the rotating cutting attachment and hot surfaces.

Throttle Operation

Pull the throttle trigger toward the grip to increase engine speed and start the cutting attachment rotation.

The trimmer has the greatest cutting force at maximum engine speed.

Release the throttle trigger to reduce engine speed. At idle, the cutting attachment should coast to a stop.

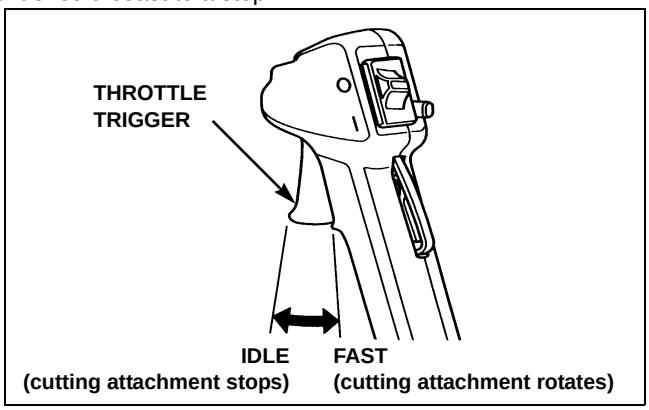

Using a Nylon Cutting-Line Head

As the ends of the line wear away, more line must be released from the cutting-line head. Your trimmer is factory-equipped with either a Kwik Loader or a semi-matic (bump feed) cutting-line head, which have different procedures for releasing line.

The debris shield is equipped with a cutoff knife that automatically removes any excess line that is released.

Kwik Loader Cutting-Line Head

Always shut the engine off when adding trimmer line to the Kwik Loader head.

To load, push the 8-inch trimmer line into the housing so there is 1/4 inch (6 mm) exposed in the inner housing radius. Do this for both sides.

The line will only move in one direction. Pull the trimmer line through the inner housing to unload.

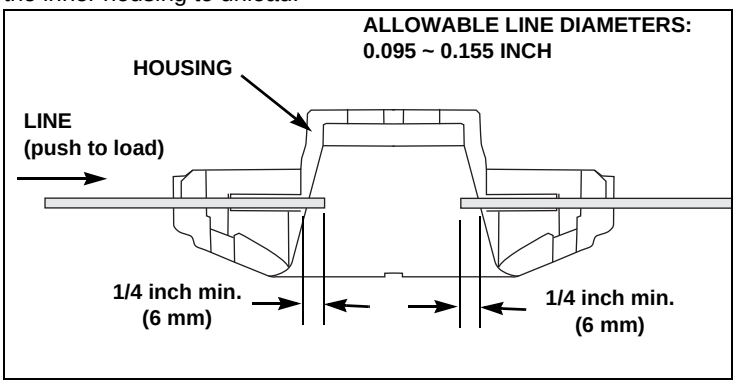

Semi-Matic (bump-feed) Cutting-Line Head

Line must be released with the cutting-line head spinning rapidly.

With the engine running at full speed, tap the cutting-line head on hard, bare ground. Do not tap the cutting-line head on pavement or concrete.

Each tap releases about 2 inches of line.

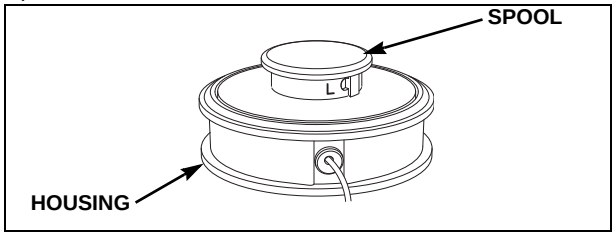

Using Blades

Refer to the chart on page 19 for appropriate blade applications.

If using a blade on a Honda trimmer equipped with a loop handle, also install the optional Honda barrier kit (page 29) that includes a full shoulder harness, a barrier bar, and debris shields for blades. Follow the installation instructions and safety information that come with the kit.

Metal blades supplied with U-type handlebar models are supplied with a cover surrounding the edge of the blade. For your safety, and to protect the blade, the cover should be installed whenever the trimmer is not in use.

Be sure to remove the blade cover before starting the engine. Otherwise, the blade cover may fly off at high speed.

- If the trimmer starts to vibrate after the blade strikes an object, stop the engine immediately and check the blade for damage. A damaged blade may break, and pieces of broken blade can become dangerous projectiles. Replace the blade if it is broken, cracked, bent, or damaged in any way.

SERVICING YOUR TRIMMER

Proper maintenance is essential for safe, economical, and trouble-free operation. It also helps reduce air pollution.

⚠ WARNING

Improper maintenance, or failure to correct a problem before operation, can cause a significant malfunction.

Some malfunctions can seriously hurt or kill you.

Always follow the inspection and maintenance recommendations and schedules in this owner's manual.

To help you properly care for your trimmer, the following pages include a maintenance schedule, routine inspection procedures, and simple maintenance procedures using basic hand tools. Other service tasks that are more difficult, or require special tools, are best handled by professionals and are normally performed by a Honda technician or other qualified mechanic.

The maintenance schedule applies to normal operating conditions. If you operate your trimmer under severe conditions, such as sustained high-load or high-temperature operation, or use in unusually wet or dusty conditions, consult your servicing dealer for recommendations applicable to your individual needs and use.

Remember that an authorized Honda servicing dealer knows your trimmer best and is fully equipped to maintain and repair it.

To ensure the best quality and reliability, use only new, Honda Genuine parts or their equivalents for repair and replacement.

Maintenance, replacement, or repair of the emission control devices and systems may be performed by any engine repair establishment or individual, using parts that are "certified" to EPA standards.

Maintenance Safety

Some of the most important safety precautions follow. However, we cannot warn you of every conceivable hazard that can arise in performing maintenance. Only you can decide whether or not you should perform a given task.

⚠ WARNING

Improper maintenance can cause an unsafe condition.

Failure to properly follow maintenance instructions and precautions can cause you to be seriously hurt or killed.

Always follow the procedures and precautions in this manual.

Safety Precautions

- Make sure the engine is off before you begin any maintenance or repairs. This will eliminate several potential hazards:
  - **Carbon monoxide poisoning from engine exhaust.** Be sure there is adequate ventilation whenever you operate the engine.
  - **Burns from hot parts.** Let the engine and exhaust system cool before touching.
  - **Injury from moving parts.** Do not run the engine unless instructed to do so.
- Read the instructions before you begin, and make sure you have the tools and skills required.
- To reduce the possibility of fire or explosion, be careful when working around gasoline. Use only a nonflammable solvent, not gasoline, to clean parts. Keep cigarettes, sparks, and flames away from all fuel-related parts.

Maintenance Schedule

Interval [1]	Item	Page
Before each use	Check the engine oil Check the air cleaner Check the throttle cable Check the debris shield Inspect the cutting attachment Check the shoulder harness quick release Check/tighten nuts, bolts, and fasteners	page 8 page 16 page 18 page 21 page 22 page 8
First month or 10 hours	Change the engine oil	page 16
Every 3 months or 25 hours	Clean the air filter element [2]	page 16
Every 6 months or 50 hours	Change the engine oil [2] Clean the air filter element [2] Check/lubricate the drive cable [3] Lubricate the gear case [3] Check the clutch shoes and drum [3] Check the engine cooling fins	page 16 page 16
Every year or 100 hours	Items for 50 hours plus the following: Check/adjust the spark plug Check the spark arrester Check the fuel filter Clean the fuel tank Check/adjust the idle speed [3] Check/adjust the valve clearance [3]	 page 17 page 18 page 19 page 19
Every 2 years or 300 hours	Items for 100 hours plus the following: Replace the spark plug	 page 17
Every 2 years	Check the fuel tubes and replace if necessary [3] Check the oil tube and replace if necessary [3]	

1. Log the hours of operation to determine the proper maintenance interval.
2. Service more frequently when used in dusty areas.
3. These items should be serviced by an authorized Honda servicing dealer unless you have the proper tools and are mechanically proficient. Refer to the Honda shop manual for service procedures. See Honda Publications on page 29 for ordering information.

Failure to follow this maintenance schedule could result in non-warrantable failure.

Oil Change

Change the oil after the first 10 hours of use. Thereafter, change the oil every 6 months or 50 hours of use. Change the oil more often when used in dusty areas.

Drain the used oil while the engine is warm. Warm oil drains quickly and completely.

1. Place a suitable container below the engine to catch the used oil.
2. Remove the oil filler cap/dipstick.
3. Tip the trimmer to drain the used oil through the oil filler opening. Allow the used oil to drain completely.

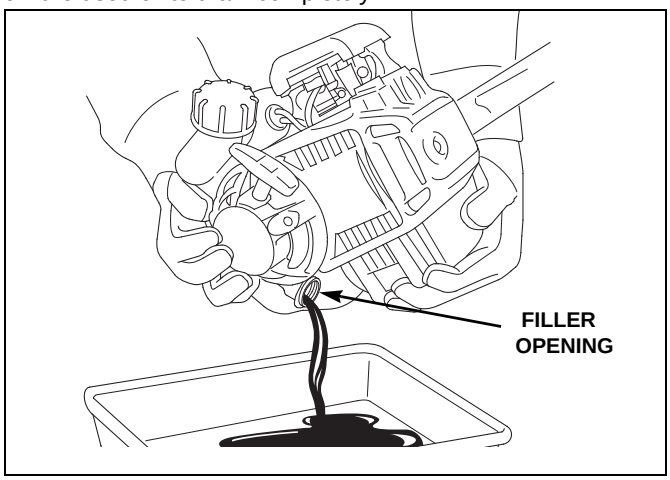

Please dispose of used motor oil in a manner that is compatible with the environment. We suggest you take used oil in a sealed container to your local recycling center or service station for reclamation. Do not throw it in the trash, pour it on the ground, or pour it down a drain.

4. With the engine in an upright position, fill with the recommended oil to the edge of the oil filler hole. Do not overfill.

   Refill amount: HHT25S, 2.7 fl oz (80 cc)
   HHT35S, 3.4 fl oz (100 cc)

5. Screw in the filler cap/dipstick securely.

Engine Oil Recommendations

Oil is a major factor affecting performance and service life. Always change the oil in accordance with the *MAINTENANCE SCHEDULE* (page 15).

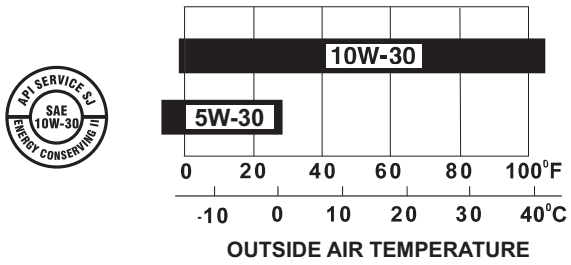

SAE 10W-30 is recommended for general use. Other viscosities shown in the chart may be used when the average temperature in your area is within the recommended range.

The SAE oil viscosity and service category are in the API label on the oil container. Honda recommends that you use API service category SJ or later oil.

NOTICE

Using nondetergent oil can shorten the engine's service life, and using 2-stroke oil can damage the engine.

Air Filter

Check the air filter after each use. Thereafter, clean the filter every 25 hours of use. Clean the filter more often when used in dusty areas. Replace the filter every 2 years or 150 hours of use.

A properly maintained air filter will help prevent dirt from entering your engine. Dirt entering the carburetor can be drawn into small passages in the carburetor and cause premature engine wear. These small passages can become blocked, causing starting or running problems.

We recommend the use of a Honda Genuine air filter to ensure it seals and performs as designed. Using a non-Honda air filter can result in dirt bypassing the filter, causing damage to the engine or fuel system.

NOTICE

Operating the engine without an air filter, or with a dry or damaged air filter, or with an improperly installed air filter cover will allow dirt to enter the engine causing rapid engine wear. Make sure the air filter is properly installed and flush with the air filter base before installing the air filter cover. This type of damage is not covered by the DISTRIBUTOR'S LIMITED WARRANTY (page 30).

Inspection

1. Move the choke lever to the CLOSED (N) position to prevent dirt from entering the engine.
2. Squeeze together the upper tabs at the top of the air filter cover to release it from its catch, then flip the cover down to remove it.

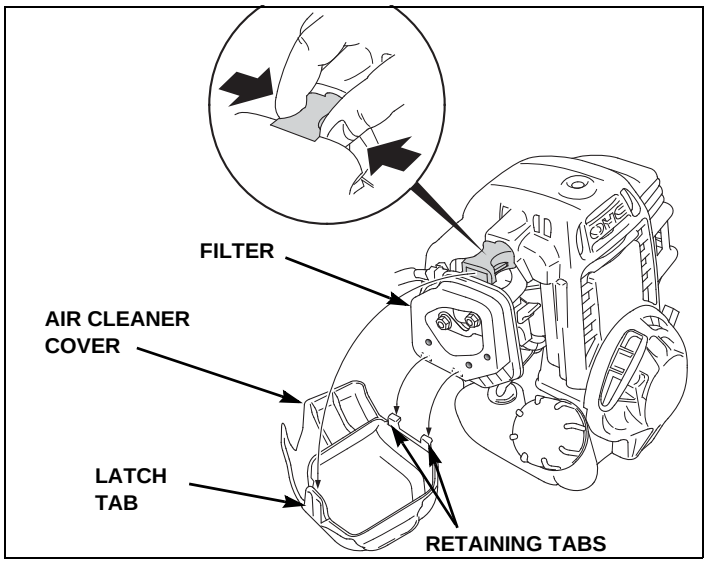

3. Check the foam air filter to be sure it is clean, properly oiled, and in good condition.
4. If the filter is dirty, clean it as described under *Cleaning* on page 17. Replace the air filter element if it is damaged.
5. Align the air filter with the air filter base. Reinstall the air filter by locating the three base pegs into the three air filter holes. Slide the air filter over the pegs until it is flush with the air filter base.
6. Reinstall the air filter cover by hooking the two lower tabs on the bottom of the cover and snapping the upper tabs into place.

Cleaning

A dirty air filter will restrict air flow to the carburetor, reducing engine performance. If you operate the trimmer in very dusty areas, clean the air filter more often than specified in the *MAINTENANCE SCHEDULE* (page 15).

Honda Air Filter Oil can be used instead of clean engine oil and is available from your authorized Honda dealer (page 29).

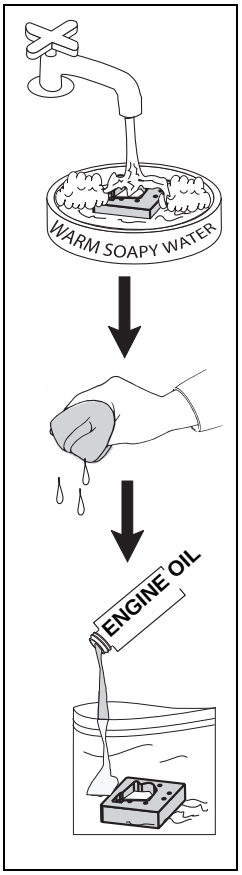

1. Remove the foam air filter from the air filter base.
2. Clean the filter in warm soapy water and rinse, or clean with nonflammable solvent.
3. Squeeze excess water from the filter and allow it to dry thoroughly.
4. Place the filter in a resealable plastic bag and pour about 1 oz. of clean engine oil into the bag. Seal the bag closed and knead the bag until the oil is completely distributed into the foam filter. Squeeze excess oil from the filter.
5. Remove the filter from the bag.

NOTICE

Operating the engine with a dry air filter will allow dust to enter the engine causing engine damage. The air filter must be oiled after cleaning.

6. Wipe dirt from the air filter base and cover using a moist rag. Be careful to prevent dirt from entering the carburetor.
7. Reinstall the foam air filter and air filter cover.

Spark Plug

Check the spark plug every year or 100 hours of use. Replace the spark plug every 2 years or after 300 hours of use.

Required Spark Plug: NGK - CMR5H

NOTICE

An incorrect spark plug can cause engine damage.

1. Use a 4 mm Allen wrench to loosen the 5 x 12 mm hex bolt and remove the fan cover.

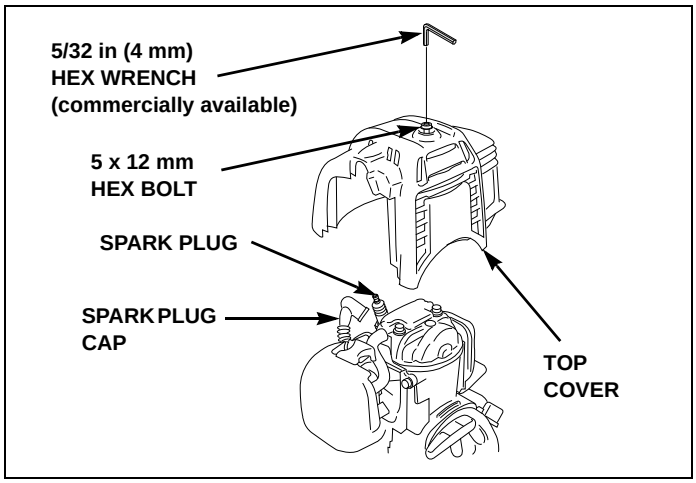

2. Disconnect the spark plug cap, and remove any dirt from around the spark plug area.
3. Remove the spark plug with a 5/8-inch spark plug wrench.
4. Inspect the spark plug. Replace it if the electrodes are worn, or if the insulator is cracked or chipped.

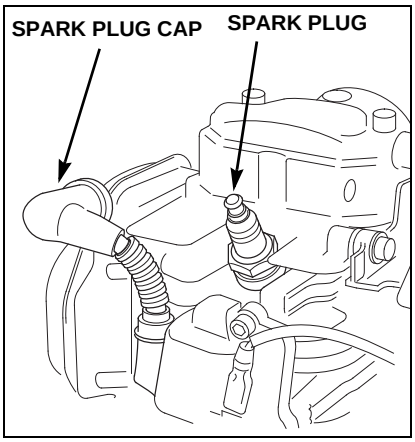

5. Measure the spark plug electrode gap with a suitable gauge.

   GAP: 0.024 ~ 0.028 in (0.60 ~ 0.70 mm)

   Correct the gap, if necessary, by carefully bending the side electrode.
6. Install the spark plug carefully, by hand, to avoid cross-threading.
7. After the spark plug seats, tighten with a 5/8-inch spark plug wrench to compress the washer.

   If reinstalling the used spark plug, tighten 1/8 ~ 1/4 turn after the spark plug seats.

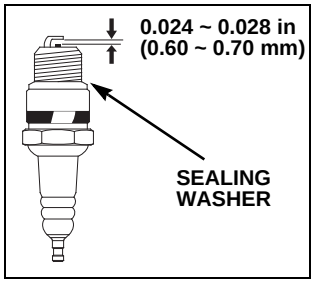

   If installing a new spark plug, tighten 1/2 turn after the spark plug seats.
   TORQUE: 8.8 ft-lb (12 N•m)

NOTICE

A loose spark plug can overheat and damage the engine. Overtightening the spark plug can damage the threads in the cylinder head.

8. Attach the spark plug cap.
9. Install the fan cover and 5 x 12 mm hex bolt and tighten securely.

Spark Arrester

The spark arrester must be serviced every 100 hours to keep it functioning as designed.

Your trimmer engine is factory-equipped with a spark arrester. In some areas, it is illegal to operate an engine without a spark arrester. Check local laws and regulations.

If the engine has been running, the muffler will be very hot. Allow the muffler to cool before servicing the spark arrester.

1. Remove the 5 x 12 mm hex bolt and top cover.

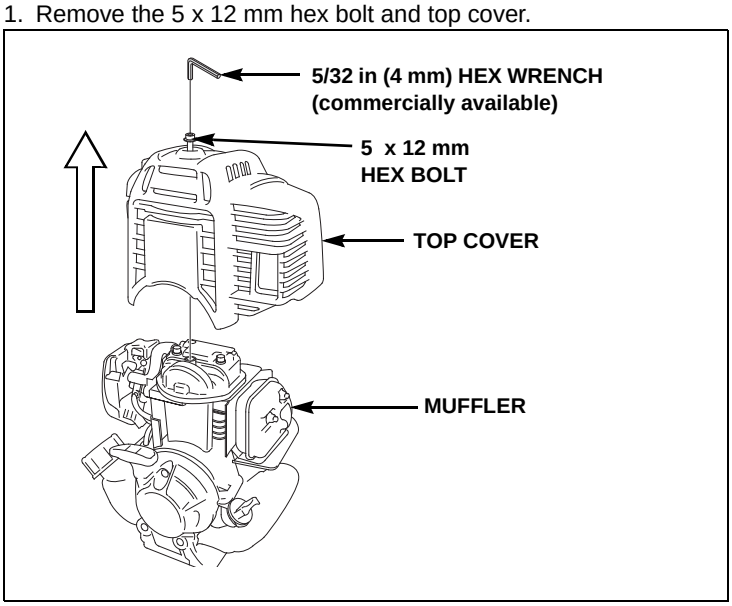

2. Remove the two 4 x 6 mm self-tapping screws from the spark arrester, and remove the spark arrester from the muffler.

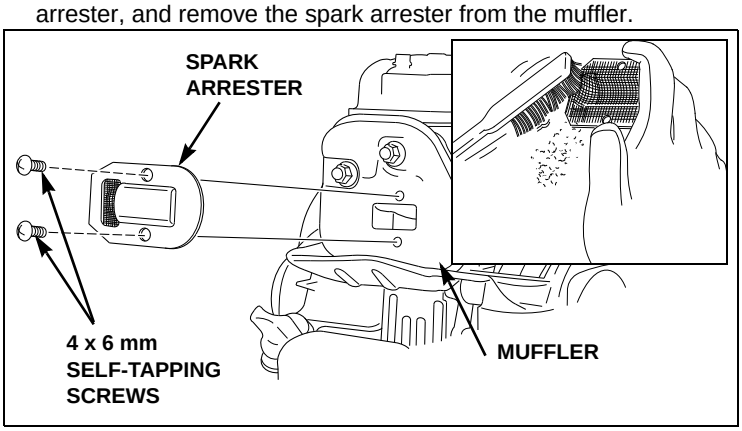

3. Use a brush to remove carbon deposits from the spark arrester screen. Be careful to avoid damaging the screen.

   The spark arrester must be free of breaks and holes. Replace the spark arrester if it is damaged.

4. Install the spark arrester, top cover, and 5 x 12 mm hex bolt and tighten securely.

Cooling Fin Inspection

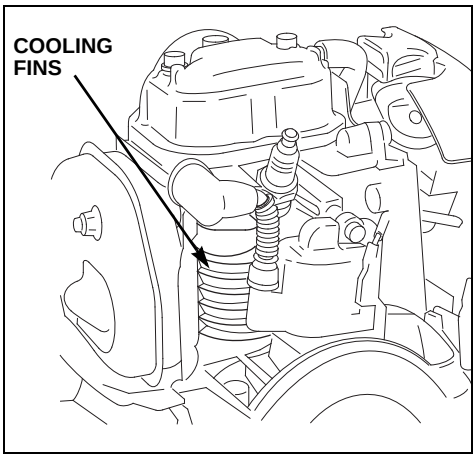

Inspect the engine cooling fins every 50 hours of operation. You should clean out any dirt and debris if air is obstructed from flowing across the cooling fins.

1. Loosen the 5 mm hex bolt, then remove the fan cover.
2. Remove all dirt and debris from the cooling fins.
3. Install the fan cover, and tighten the 5 mm hex bolt securely.

Throttle Cable Inspection

Verify the throttle trigger operates smoothly, releases properly, and the throttle cable is undamaged. If there is visible damage, or if the throttle lever does not operate smoothly or release properly, take your trimmer to your authorized Honda servicing dealer.

Check the freeplay at the end of the throttle lever.

If adjustment is needed, see the *Throttle Cable Adjustment* procedure below.

Throttle Cable Adjustment

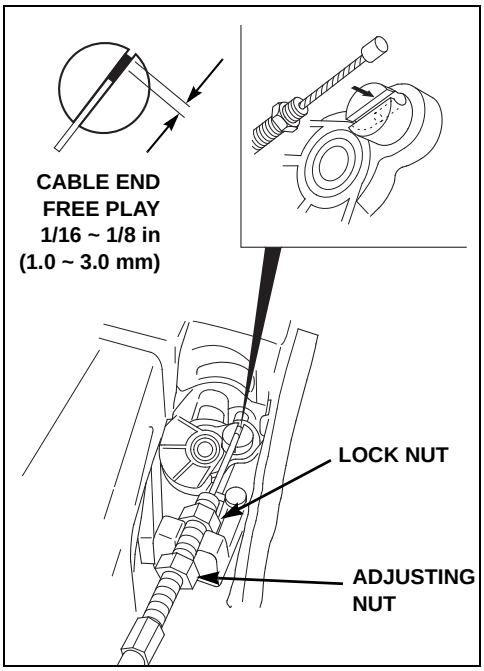

1. Loosen the locknut with a 10 mm wrench, and move the adjuster in or out as required.

   Throttle Lever Freeplay: 1/16 ~ 1/8 in (1.0 ~ 3.0 mm)

2. Tighten the locknut and recheck throttle lever freeplay.

Carburetor Adjustment

A tachometer is required to adjust the idle speed. If you do not have one, take your trimmer to an authorized Honda servicing dealer to perform idle speed adjustment.

1. Start the engine outdoors, and allow it to warm up to normal operating temperature.
2. Turn the throttle stop screw to obtain a stable idle, below the speed at which the trimmer head begins to turn.

Standard Idle Speed: 3,100 ± 200 rpm

Fuel Tube Inspection

Check the fuel supply and return tubes, and replace any tube that is damaged, cracked, or leaking. Also check the priming bulb for cracks, discoloration or leaks.

Refer to the Honda shop manual for tube replacement instructions, or take the trimmer to an authorized Honda servicing dealer.

Fuel Filter and Fuel Tank Cleaning

1. Remove the fuel tank cap.
2. Tip the trimmer and empty the fuel tank into an approved gasoline container. Use a funnel to avoid spilling gasoline.
3. Pull the fuel filter out through the fuel filler neck by hooking the black fuel supply tube with a piece of wire, such as a partly straightened paper clip.
4. Inspect the fuel filter. If the fuel filter is dirty, wash it with nonflammable solvent. Be careful to avoid damaging the filter.
5. Replace the filter if it is damaged or excessively dirty.
6. Rinse sediment from the fuel tank with nonflammable solvent.
7. Insert the fuel filter in the fuel tank, and install the fuel tank cap.

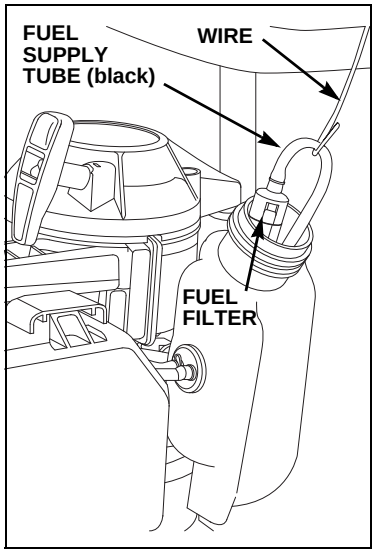

CUTTING ATTACHMENTS

Applications

ATTACHMENTS FOR TRIMMING GRASS AND LIGHT WEEDS

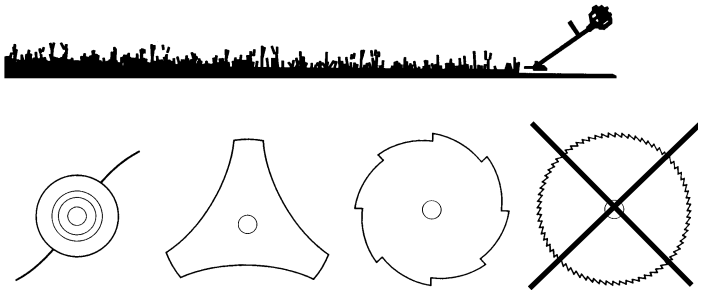

ATTACHMENTS FOR CUTTING THICK WEEDS AND LIGHT BRUSH

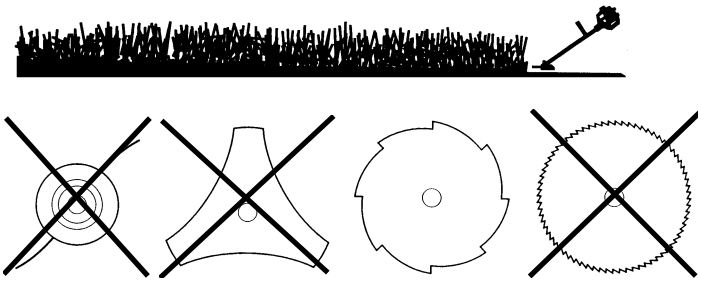

ATTACHMENTS FOR CUTTING WOODY BRUSH, SHRUBS, SAPLINGS

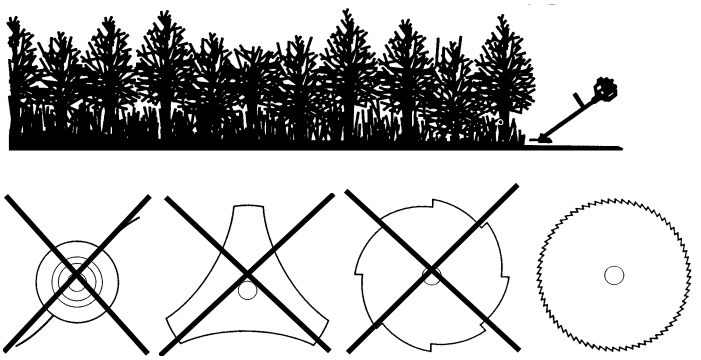

Your Honda trimmer servicing dealer has cutting attachments that have been designed and approved for your trimmer and are covered by warranty. Non-Honda attachments are usually designed for universal applications. Although aftermarket attachments may fit on your trimmer, they may not meet factory specifications and could make your trimmer unsafe.

Blades

If installing a metal blade on a Honda trimmer equipped with a loop handle, also install the optional **Barrier Kit** that includes a full shoulder harness, a barrier bar, and two different debris shields for metal blades. Follow the safety information and installation instructions that come with the kit.

Grass/Weed Blades

Grass/weed blades, which may be plastic or metal, are used as an alternative to nylon monofilament line for cutting grass and ordinary weeds.

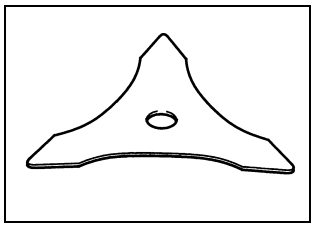

However, blades should never be used for edging against solid surfaces.

Weed/Brush Blades

These metal blades have chisel-shaped teeth that are used for cutting through field grass, thick weeds, and light brush. They are not designed for sawing woody material. The teeth must be sharp for good results.

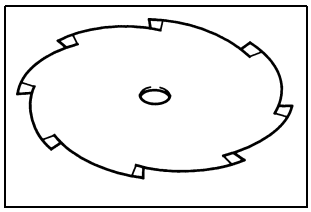

Brush/Wood Blades

These metal saw-tooth blades are used for sawing through saplings, shrubs and woody brush. The teeth must be sharp for good results. Brush/wood blades will also cut grass and weeds, but they are not efficient for that purpose.

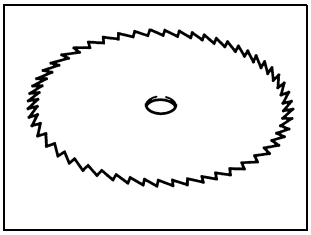

Blade Cover

Use the blade cover to protect yourself from injury while installing or removing the blade and to protect the blade from damage during storage.

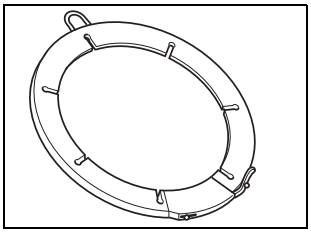

Blade Inspection

Always wear gloves when working around the blade. Before each use, check the blade for wear and damage, and check the tightness of the blade lock nut. Examine the entire head area, including the debris shield, and clear or clean it free from dirt, debris, loose string, wire, or any other foreign materials.

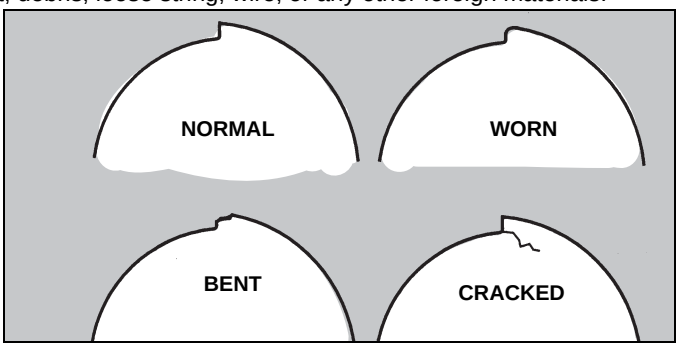

⚠ WARNING

A worn, damaged or cracked blade can break, and pieces of the damaged blade can become dangerous projectiles.

A dull blade is more likely to snag and thrust (kickback).

Inspect the blade regularly, and do not operate the trimmer with a dull, worn, or damaged blade.

A dull blade can be sharpened, but a blade that is worn out, bent, cracked, chipped, or otherwise damaged must be replaced.

When a blade needs sharping or replacement, take the trimmer to a Honda trimmer servicing dealer. Or, if you have a torque wrench, you can remove and install a blade yourself.

Blade Removal and Installation

Always wear gloves and install the blade cover on the blade when working around the blade.

A torque wrench is required to install the blade. If you do not have a torque wrench, have a Honda trimmer servicing dealer tighten the blade lock nut for you before using the trimmer.

If the blade lock nut is tightened too much, the output shaft can break. If the blade lock nut is not tightened enough, the blade could come off. In either case, it would be possible for the blade to fly off while you are operating the trimmer.

The blade lock nut is specially designed for this application. When replacing the lock nut, use only a Honda Genuine replacement lock nut.

BLADE SHARPENING: To avoid weakening the blade or causing imbalance or poor cutting, the blade should be sharpened by trained staff at a Honda trimmer servicing dealer.

BLADE REPLACEMENT: Your Honda trimmer servicing dealer has cutting attachments that have been designed and approved for your trimmer and are covered by a warranty. Non-Honda attachments are usually designed for universal applications. Although aftermarket attachments may fit on your trimmer, they may not meet factory specifications and could make your trimmer unsafe.

1. Install the protective plastic cover that came with the blade (U-type brush/wood blade only).
2. Insert a commercially available 4 mm hex tool or equivalent fully into the gear case hole.

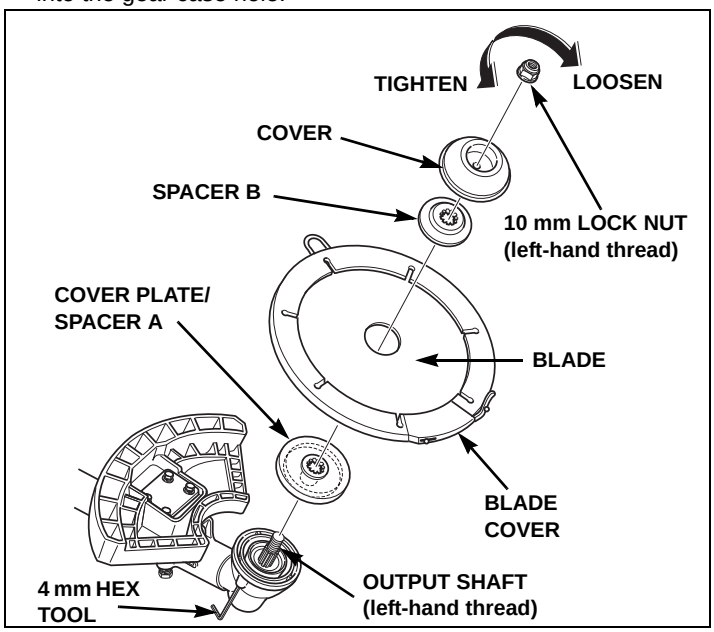

3. Turn the blade until you feel the tool drop into the hole in cover plate/spacer A. Verify the blade does not turn. The output shaft and blade lock nut have a left-hand thread. Make sure the tool remains in the hole, then loosen the blade nut as shown. Pay attention to the order and orientation of the parts as they are removed.
4. Installation is the reverse of removal. Make sure you install the blade with the cutting edges in the direction of rotation (page 23). Be sure to align the hole in the blade with the shoulder on cover plate/ spacer A. Tighten the blade nut to the specified torque.

   TORQUE: 15 ft-lb (20 N•m)

Debris Shields

Always use the correct debris shield when operating the trimmer. In addition to safety concerns, it can cause an overload to the clutch due to excessive line length. Clutch failure due to running the trimmer without a shield installed is not covered under warranty.

A variety of blades are available from your Honda trimmer servicing dealer. Always use the debris shield designed for use with a blade when attaching a blade to your trimmer. The blade type debris shield does not have a cutoff knife.

Inspect the shield for excessive wear, damage, or looseness before each use. If the shield is damaged, it must be replaced.

DEBRIS SHIELDS		ATTACHMENTS
CUTTING-LINE * **Always install shield and cutter to prevent clutch overload.**	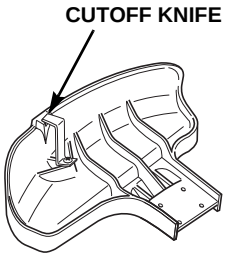	

* Standard on all types.

3 - 8 TOOTH ** GRASS/WEED BLADE, WEED/ BRUSH BLADE **Maximum blade diameter:** **HHT25 = 9 inch** **HHT35 = 10 inch**	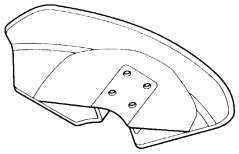	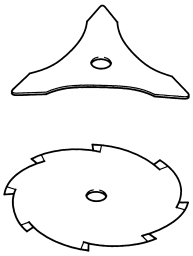

** Optional on all types.
Also included with optional barrier kit for SLTAT.

22 - 80 TOOTH * BRUSH/WOOD SAW BLADE** **Maximum blade diameter:** **HHT25 = 9 inch** **HHT35 = 10 inch**	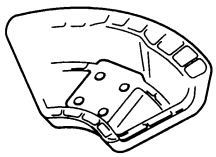	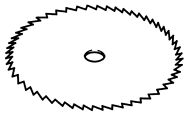

*** Standard on SUKAT.
Also included with optional barrier kit for SLTAT.

.

Changing the Debris Shield

Refer to the applicable illustration for removing and installing the debris shields. Tighten the spacer bolts/washers to the specified torque.

TORQUE: 2.5 ft-lb (3.4 N•m)

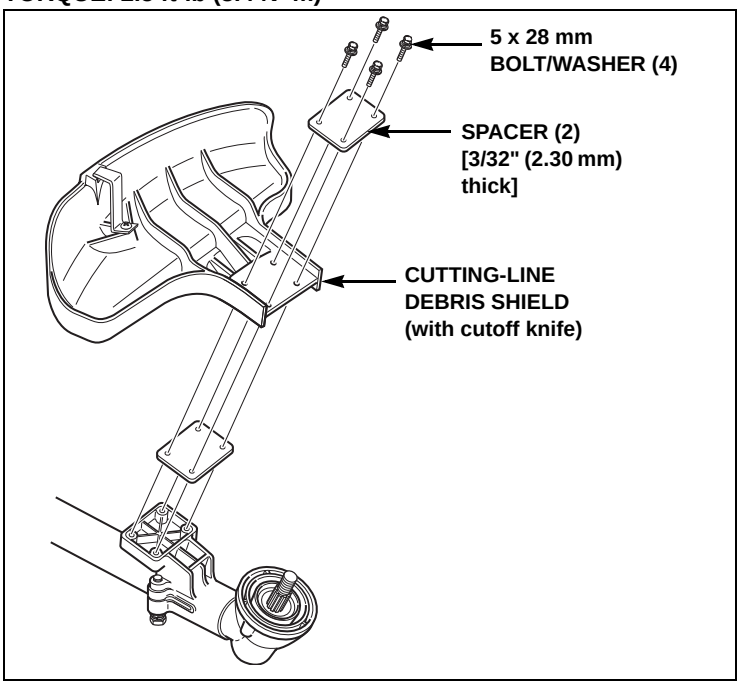

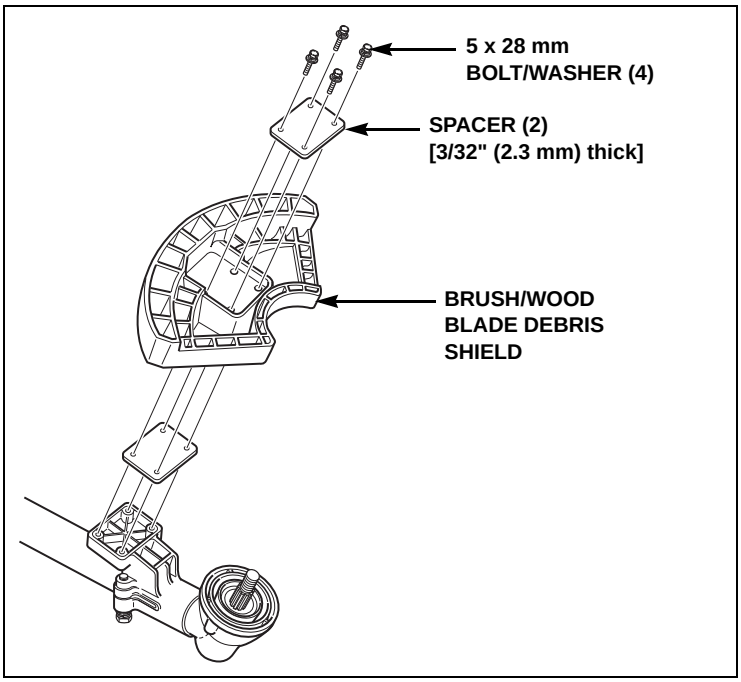

Cutting-Line Heads

All Honda trimmers come with either a Kwik Loader or semi-matic cutting head. Read this section to learn how to inspect, install new line, and remove and install a cutting head from the trimmer.

A cutting-line head containing nylon monofilament line and a debris shield with a cutoff knife is standard equipment. The shield's cutoff knife automatically removes any excess line that is released from the cutting head.

The U-type handlebar trimmers are supplied with two different debris shields. Use the debris shield with the cutoff knife when the cutting-line head is installed.

Nylon monofilament line is suitable for cutting grass and ordinary weeds, but not brush and woody growth.

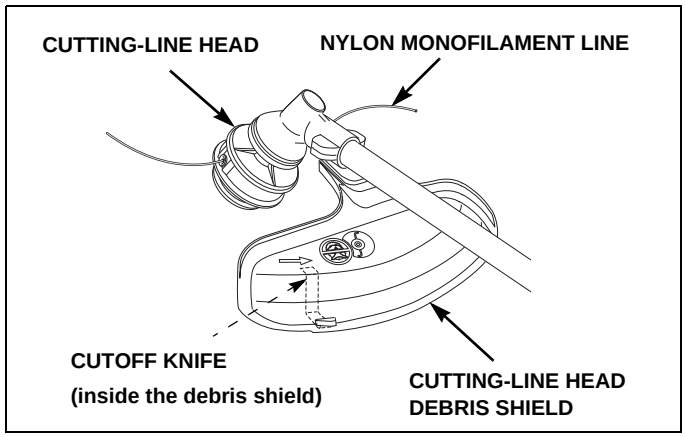

Inspection

Make sure the nylon line is only sticking out of the metal eyelets on the head. If any of the line has come off the spool, follow the *Installing Replacement Nylon Line* instructions in this section to disassemble the spool and replace the line.

Examine the entire head area, including the debris shield, and clear or clean it free from dirt, debris, loose string, wire, or any other foreign materials.

For the Kwik Loader head, make sure the three-sided knob is correctly tightened (page 23). For the semi-matic head, verify the spool is locked in place (page 23). For both head styles, check for any cracks in the plastic and replace any damaged parts.

Installing Replacement Nylon Line

First, determine which cutting-line head style is on your trimmer. A Kwik Loader head uses two 8 inch long line segments, while the semi-matic head has a spring-loaded round button on the bottom of the head which automatically extends the line during use when bumped on the ground.

Do not use any kind of metal, wire, or wire rope line on the trimmer. Use only Honda Genuine replacement nylon trimmer line or equivalent.

Honda trimmers come standard with low noise line. Using non-Honda line may result in increased noise levels.

For original, factory-installed Honda cutting-line heads, use only nylon monofilament line in the line sizes shown below.

HHT25S	0.095 in
HHT35S (semi-matic) (Kwik Loader)	0.095 or 0.105 in 0.095 to 0.130 in x 8 in long

See page 29 for replacement parts information.

Kwik Loader Cutting-Line Head

Always shut the engine off before adding trimmer line to the head. To load, push the 8-inch trimmer line into the housing so there is 1/4 inch (6 mm) exposed in the inner housing radius. Do this for both sides. The line will only move in one direction. Pull the trimmer line through the inner housing to unload.

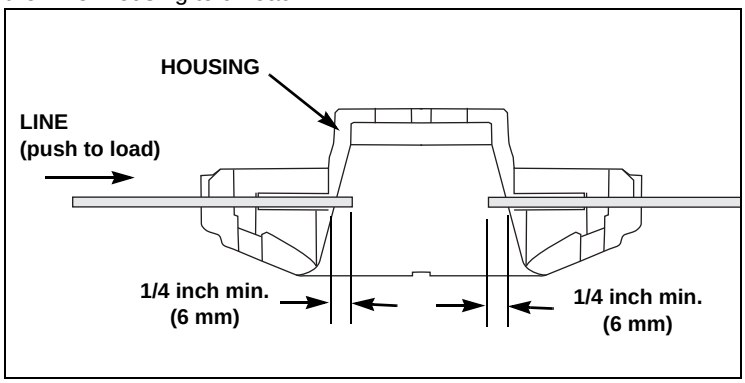

Semi-Matic (Bump-Feed) Cutting-Line Head

Line is released from the cutting head by bumping the spool on hard ground while the head is spinning. Do not tap the cutting-line head on pavement or concrete.

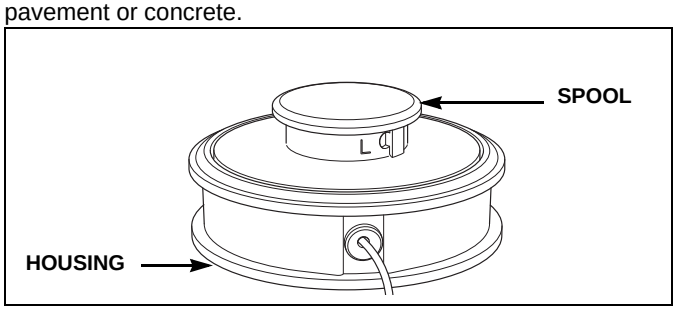

1. Clean any mud, dirt, debris, etc., from around the trimmer head area; otherwise, it will be more difficult to service.
2. Locate the half-round locking hole on the spool.

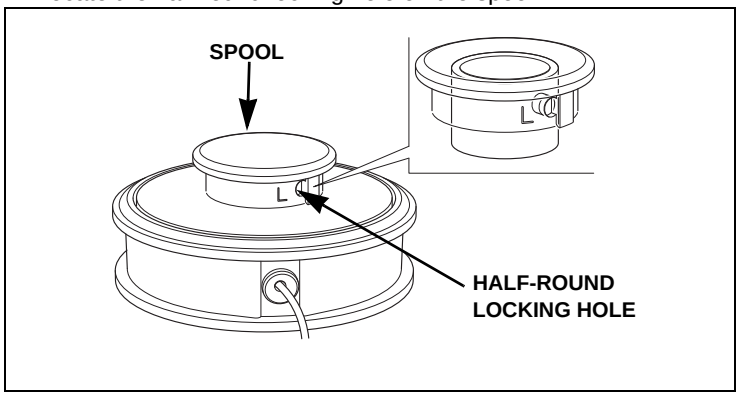

3. It may be necessary to lightly rotate the spool in the direction of the arrow about an 1/8 turn until the spool stops.

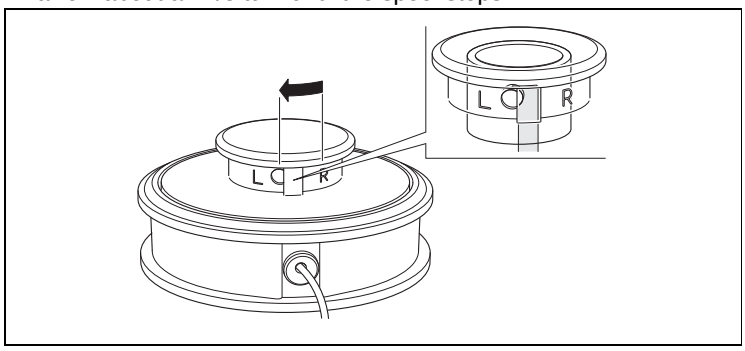

4. Hold the housing securely, then continue to rotate the spool in the direction of the arrow an additional 1/4 inch or the width of the channel to unlock the spool from the housing.

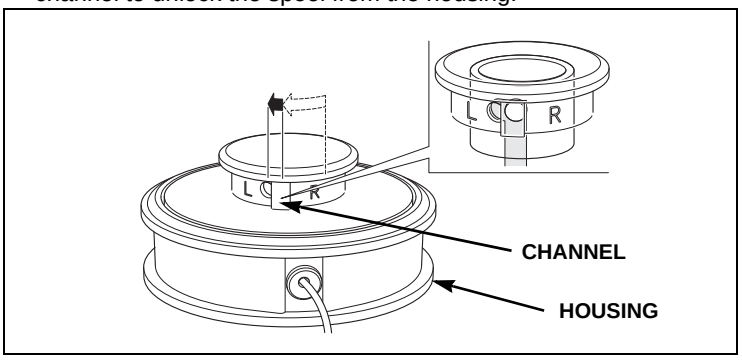

5. Lift the spool out of the housing and remove any remaining line from the spool.

6. Measure approximately 20 feet (6 meters) of new line, then thread one end through the hole in the ridge on the spool.

   Pull the line until the two lengths are equal.

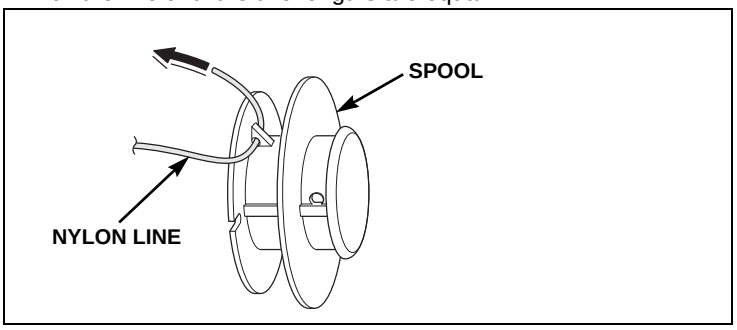

7. Wind both lines tightly and evenly from side to side ignoring the ridge. Feed the line while turning the spool in the direction of the arrow. Do not allow the line to get twisted.

   It is important to prevent the two lines from getting twisting over each other. Position a finger between the lines as you turn the spool to prevent the lines from twisting.

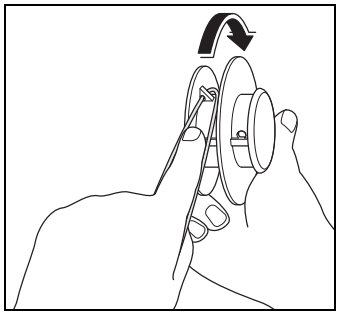

8. When you have about 6 inches (150 mm) of line remaining, press the lines into the two notches on the bottom of the spool. This will hold the lines on the spool for reassembly.

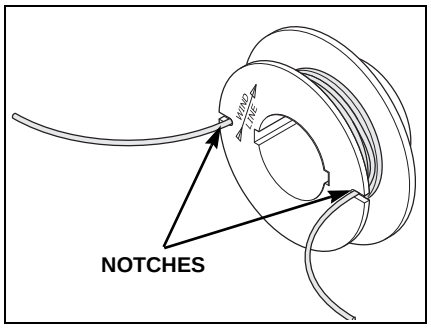

9. Feed both line ends through the metal eyelets in the housing.

   It may be necessary to push down and rotate the outer drive until the round lugs align with the metal eyelets.

10. Align the channels in the spool with the round lugs on the outer drive. With the channels and notches aligned with the metal eyelets, slide the spool into the housing with a continuous snap-in motion. Be careful not to let the line slip under the spool. When the spool reaches the bottom of the housing, the lines should snap out of the spool notches.

    If you are not sure if the lines have snapped out of the notches, gently pull the spool away from the housing about an 1/8 inch to inspect the lines. If necessary, gently pull each line until your hear it snap out of the notch.

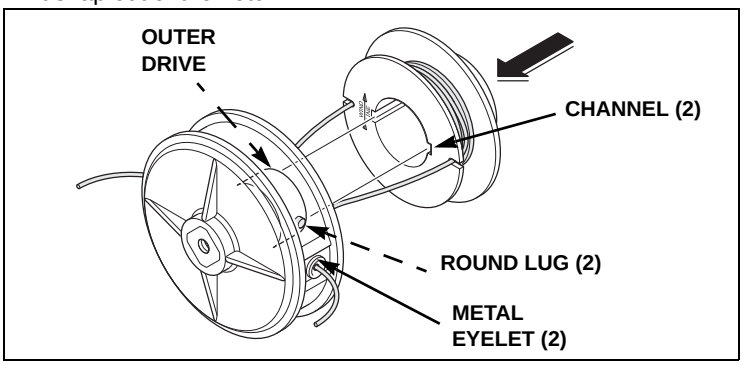

11. Hold the housing and rotate the spool in the direction of the arrow to lock the round lug into the half-round locking hole. Trim the lines so they are equal length.

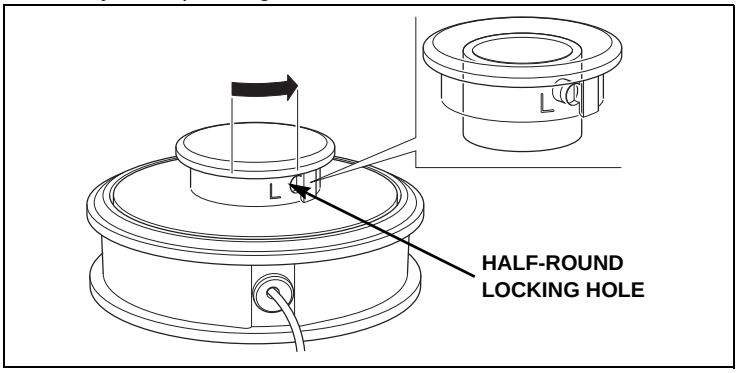

Removal and Installation

This section shows you how to remove and install either style trimmer head from your trimmer.

1. Insert the tip of a 4 mm hex wrench, or equivalent, fully into the gear case hole.

2. Turn the trimmer cutting-line head until you feel the tool drop into the hole in the cover plate/spacer A. Verify the trimmer head does not turn.

3. All output shafts use left-hand threads. Make sure the tool remains in the hole, then grasp the trimmer head and turn in the direction of the arrow to remove.

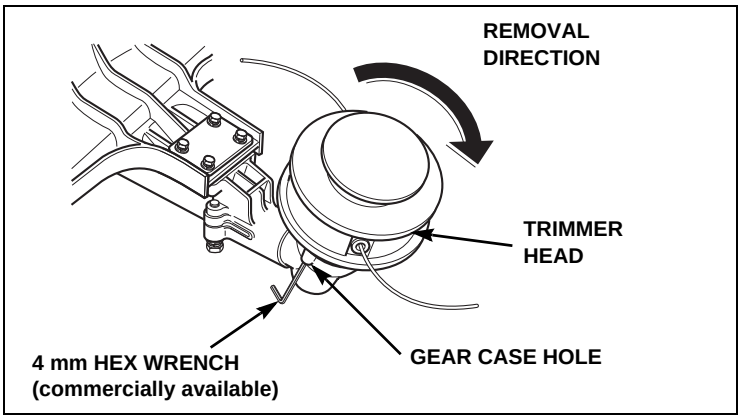

4. Remove spacer B and cover plate/spacer A from the output shaft (page 20). Note the order and orientation of each part as you remove them.

5. Installation is the reverse of removal. Always clean debris, dirt, loose line, etc. from the trimmer head and output shaft area before installation. Tighten the trimmer head securely.

TRANSPORTING

Before Loading

If the engine has been running, allow it to cool for at least 15 minutes before loading the trimmer on the transport vehicle. A hot engine and exhaust system can burn you and can ignite some materials.

1. Turn the engine switch to the OFF position.
2. Make sure the fuel cap is securely tightened.
3. Install the wheels in the transport position for greater ground clearance and ease of movement.

Loading

The trimmer may be secured by suitable clamps, hangers or straps. Secure the trimmer by at least two points along the frame pipe. Avoid securing the trimmer by the engine, cutting head/gear case or handle area. The trimmer should be secured in a horizontal position, with the engine upright as shown.

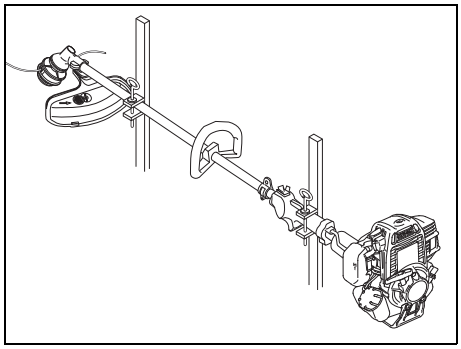

Don't hang the trimmer by the gear case or cutting head, or they may be damaged.

STORAGE

Proper storage preparation is essential for keeping your trimmer trouble free and looking good. To help keep rust and corrosion from impairing your trimmers function and appearance, and to make the engine easier to start after storage, follow the instructions described in this section to:

- Drain or treat the fuel
- Change the oil and coat the engine cylinder
- Clean the trimmer and engine
- Choose a storage location

Fuel

See "AVOIDING FUEL-RELATED PROBLEMS" on page 28 for a list of recommended procedures to avoid fuel related problems.

The *DISTRIBUTOR'S LIMITED WARRANTY* (page 30) does not cover fuel system damage or engine performance problems resulting from neglected storage preparation.

Draining the Fuel Tank and Carburetor

⚠ WARNING

Gasoline is highly flammable and explosive, and you can be burned or seriously injured when handling fuel.

- Stop the engine and let cool before handling fuel.
- Keep heat, sparks, and flame away.
- Refuel only outdoors.
- Wipe up spills immediately.

Disconnect the spark plug cap. Make sure the ignition switch is in the STOP position.

Drain fuel from the tank into an approved container. Press the primer bulb several times to draw any fuel out of the carburetor back to the fuel tank, and then drain this fuel from the tank.

Oil

Change the engine oil (see page 16).

Add oil in the engine cylinder to prevent rust.

1. Remove the spark plug (page 17).
2. Pour a 1/4 teaspoon (1 cc) of clean engine oil into the cylinder to keep it from rusting.
3. Pull the starter rope several times to distribute the oil in the cylinder.
4. Reinstall the spark plug.
5. Pull the starter rope slowly until resistance is felt, and then return the starter grip gently. This will close the valves so moisture cannot enter the engine cylinder.

Cleaning

1. Disconnect the spark plug cap from the spark plug.
1. Wash the trimmer, including the area around the trimmer head.
2. Wash the engine by hand, and be careful to prevent water from entering the air cleaner.

   NOTICE

   Using a garden hose or pressure washing equipment can force water into the air cleaner. Water in the air cleaner will soak the filter and can enter the carburetor or engine, causing damage.

3. Water on a hot engine can cause damage. If the engine has been running, allow it to cool for at least 1/2 hour before washing.
4. If using a garden hose or pressure washing equipment to clean the trimmer, be careful to avoid getting water into controls and cables, or anywhere near the engine air cleaner or muffler opening.
5. After washing the trimmer, wipe dry all accessible surfaces.
6. Reconnect the spark plug cap and start the engine outdoors. Let it run until it reaches normal operating temperature to evaporate any water remaining on the engine. Stop the engine and allow it to cool.
7. After the trimmer is clean and dry, touch up any damaged paint, and coat other areas that may rust with a light film of oil.

Storage Location

If your trimmer will be stored with gasoline in the fuel tank and carburetor, it is important to reduce the hazard of gasoline vapor ignition. Select a well-ventilated dry storage area away from any appliance that operates with a flame, such as a furnace, water heater, or clothes dryer. Also avoid any area with a spark-producing electric motor, or where power tools are operated.

With the engine and exhaust system cool, cover the trimmer to keep out dust. A hot engine and exhaust system can ignite or melt some materials. Do not use sheet plastic as a dust cover. A nonporous cover will trap moisture around the trimmer, promoting rust and corrosion.

Removing From Storage

Check your trimmer as described in *BEFORE OPERATION* (page 7).

If the fuel was drained during storage preparation, fill the tank with fresh gasoline. If you keep a container of gasoline for refueling, be sure that it contains only fresh gasoline. Gasoline oxidizes and deteriorates over time, causing hard starting.

If the cylinder was coated with oil during storage preparation, the engine may smoke briefly at startup. This is normal.

TROUBLESHOOTING

Engine Will Not Start

Possible Cause	Correction
Ignition switch is in the STOP (O) position.	Turn the ignition switch ON (I).
Choke is not in the CLOSED (N) position (cold engine).	Move the choke to the CLOSED (N) position.
Out of fuel.	Add fuel and press the priming bulb
Bad fuel, trimmer stored without treating or draining gasoline.	Drain the fuel tank and carburetor, refuel with fresh gasoline.
Spark plug is faulty, fouled, or has incorrect gap.	Gap or replace the spark plug.
Fuel filter clogged, carburetor malfunction, ignition malfunction, valves stuck, etc	Take the trimmer to an authorized Honda dealer for repair.

Loss of Power or Engine Speed Won't Increase

Possible Cause	Correction
Air filter is dirty or clogged.	Clean or replace the air filter.
Fuel filter is dirty or clogged.	Replace the fuel filter.
Throttle cable is out of adjustment, broken, or bent.	Adjust the cable or replace it if necessary (page 18).
Spark arrester clogged.	Clean the screen.
Grass is wrapped around the output shaft and/or cutting attachment.	Move the ignition switch to the STOP (O) position and disconnect the spark plug cap from the spark plug. Remove grass from the output shaft and cutting area.

Cutting-Line Head Won't Stop Turning

Possible Cause	Correction
Fault in the throttle control or cable; throttle cable out of adjustment or bent.	Take the trimmer to an authorized Honda dealer for repair.
Idle speed is too fast.	
Broken or worn clutch springs, or faulty clutch system.	

Cutting-Line or Blade Head Won't Turn

Possible Cause	Correction
Worn or broken clutch, broken drive cable, worn or broken gear case parts.	Take the trimmer to an authorized Honda dealer for repair.

Excessive Vibration

Possible Cause	Correction
Loose cutting-line head or blade nut.	Tighten the cutting-line head or blade nut securely.
Cutting-line has unequal line lengths.	Rewind the cutting-line and cut to equal lengths.
Damaged blade.	Replace the blade.

TECHNICAL INFORMATION

Serial Number Locations

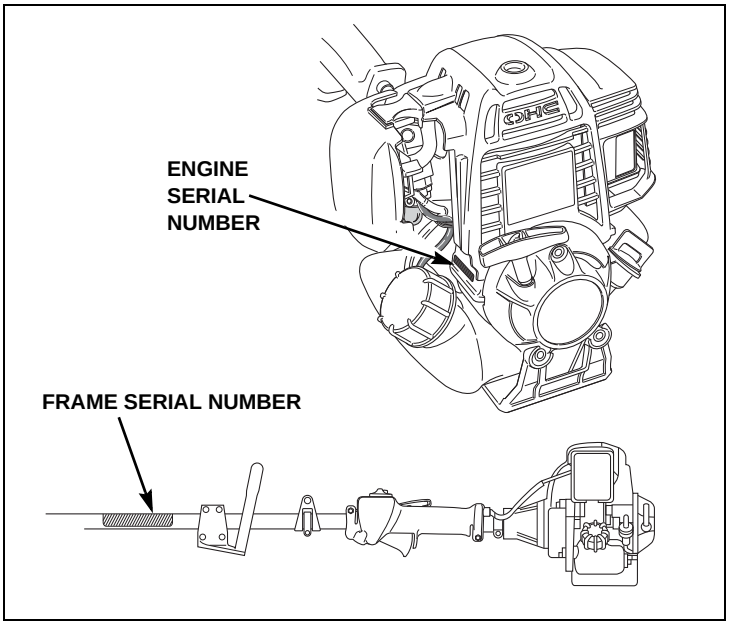

There are two serial numbers, one for the engine and one for the frame. Record the engine and frame serial numbers in the space below. You will need these serial numbers when ordering parts and when making technical or warranty inquiries.

Engine serial number: _____

Frame serial number: _____

Date of purchase: _____

High Altitude Operation

At high Altitudes, the standard carburetor air-fuel mixture will be too rich. Performance will decrease, and fuel consumption will increase. A very rich mixture will also foul the spark plug and cause hard starting. Operation at an Altitude that differs from that at which this engine was certified, for extended periods of time, may increase emissions.

High altitude performance can be improved by specific modifications to the carburetor. If you always operate your trimmer at altitudes above 5,000 feet (1,500 meters), have your servicing dealer perform this carburetor modification. This engine, when operated at high altitude with the carburetor modifications for high altitude use, will meet each emission standard throughout its useful life.

Even with carburetor modification, engine horsepower will decrease about 3.5% for each 1,000-foot (300-meter) increase in altitude. The effect of altitude on horsepower will be greater than this if no carburetor modification is made.

NOTICE

When the carburetor has been modified for high altitude operation, the air-fuel mixture will be too lean for low altitude use. Operation at altitudes below 5,000 feet (1,500 meters) with a modified carburetor may cause the engine to overheat and result in serious engine damage. For use at low altitudes, have your servicing dealer return the carburetor to original factory specifications.

Emission Control System

Source of Emissions

The combustion process produces carbon monoxide, oxides of nitrogen, and hydrocarbons. Control of hydrocarbons and oxides of nitrogen is very important because, under certain conditions, they react to form photochemical smog when subjected to sunlight. Carbon monoxide does not react in the same way, but it is toxic.

Honda utilizes appropriate air/fuel ratios and other emissions control systems to reduce the emissions of carbon monoxide, oxides of nitrogen, and hydrocarbons. Additionally, Honda fuel systems utilize components and control technologies to reduce evaporative emissions.

U.S. EPA, CARB, and Environment Canada

EPA, California, and Canadian emissions regulations require all manufacturers to furnish written instructions describing the operation and maintenance of emissions control systems.

The following instructions and procedures must be followed in order to keep the emissions from your Honda engine within the emissions standards.

Tampering and Altering

NOTICE

Tampering is a violation of federal and California law.

Tampering with or altering the emissions control system may increase emissions beyond the legal limit. Among those acts that constitute tampering are:

- Removal or alteration of any part of the intake, fuel, or exhaust systems.
- Altering or defeating the speed-adjusting mechanism to cause the engine to operate outside its design parameters.

Problems That May Affect Emissions

If you are aware of any of the following symptoms, have your engine inspected and repaired by your servicing dealer.

- Hard starting or stalling after starting
- Rough idle
- Misfiring, backfiring under load, or afterburning
- Black exhaust smoke or high fuel consumption

Replacement Parts

The emissions control systems on your new Honda engine were designed, built, and certified to conform with EPA, California, and Canadian emissions regulations. We recommend the use of Honda Genuine parts whenever you have maintenance done. These original-design replacement parts are manufactured to the same standards as the original parts, so you can be confident of their performance. The use of replacement parts that are not of the original design and quality may impair the effectiveness of your emissions control system.

A manufacturer of an aftermarket part assumes the responsibility that the part will not adversely affect emissions performance. The manufacturer or rebuilder of the part must certify that use of the part will not result in a failure of the engine to comply with emissions regulations.

Maintenance

Follow the *MAINTENANCE SCHEDULE* on page 15. Remember this schedule is based on the assumption that your machine will be used for its designed purpose. Sustained high-load or high-temperature operation, or use in unusually wet or dusty conditions, will require more frequent service.

Air Index

An Air Index Information hang tag/label is applied to engines certified to an emission durability time period in accordance with the requirements of the California Air Resources Board.

The bar graph is intended to provide you, our customer, the ability to compare the emissions performance of available engines. The lower the Air Index, the less pollution.

The durability description is intended to provide you with information relating the engine's emission durability period. The descriptive term indicates the useful life period for the engine's emission control system. See your *EMISSION SYSTEM WARRANTY* (page 31) for additional information.

Descriptive Term	Applicable to Emissions Durability Period
Moderate	50 hours (0 ~ 80 cc) 125 hours (greater than 80 cc)
Intermediate	125 hours (0 ~ 80 cc) 250 hours (greater than 80 cc)
Extended	300 hours (0 ~ 80 cc) 500 hours (greater than 80 cc) 1000 hours (225 cc and greater)

Specifications

Features

	HHT25SLTAT	HHT35SLTAT	HHT35SUKAT
Loop handle	•	•	
U-type handlebar			•
Kwik Loader head	optional	optional	•
Manual feed head	optional	optional	optional
Semi-matic feed head	•	•	optional
Saw blade	optional [1]	optional [1]	•

[1] Requires optional Barrier Kit

Dimensions

	Handle Installed	HHT25S	HHT35S
Length	Loop	73.4 in (1865 mm)	73.8 in (1875 mm)
	U-type	n/a	75.0 in (1905 mm)
Width	Loop	12.8 in (325 mm)	12.8 in (325 mm)
	U-type	n/a	23.6 in (600 mm)
Height	Loop	9.6 in (245 mm)	10.2 in (260 mm)
	U-type	n/a	15.9 in (405 mm)
Dry weight*	Loop	13.0 lb (5.6 kg)	14.8 lb (6.7 kg)
	U-type	n/a	15.4 lb (7.0 kg)

* Excludes cutting head

Engine

Model	GX25	GX35
Engine type	4-stroke, overhead-cam, single-cylinder	
Displacement	1.5 cu in (25.0 cc)	2.2 cu in (35.8 cc)
Bore & stroke	1.4 x 1.0 in (35 x 26 mm)	1.5 x 1.2 in (39 x 30 mm)
Ignition system	Transistorized magneto	
Starting system	Recoil	
Fuel	Unleaded gasoline (86 octane or higher)	
Fuel tank capacity	0.15 gal (19.6 fl oz, 0.58 L)	0.17 gal (21.3 fl oz, 0.63 L)
Oil capacity	2.7 fl oz (80 cc)	3.4 fl oz (100 cc)
Carburetor type	Diaphragm type (overflow return) with fuel pump	
Air cleaner	Single element, semi-dry	
Idle speed	3,100 ± 200 rpm	
Noise	94.8 dBA @ 8000 rpm	

Frame

Model		GX25	GX35
Ignition switch		Slide type	
Throttle control		Two-motion trigger style	
Frame pipe	OD	1.0 in (25.4 mm)	
	Thickness	0.059 in (1.5 mm)	
Drive type	Material	Flexible steel cable	
	OD	0.25 in (6.3 mm)	
	Engagement	0.20 in (5 mm) square drive both ends	
Drive bushing	Material	Nylon	
	Length	57.5 in (1460 mm)	
Gear case	Ratio	1.24: 1 (input: output shaft)	
	Type	Ball bearings, helical cut gears, no shims required	
Clutch	Size	2.18 in (55.2 mm)	3.09 in (78.4 mm)
	Engagement	4,200 ± 200 rpm	
	Drive	Square female	
	Type	Centrifugal	

Maintenance

Item	Description	Page
Fuel	Unleaded gasoline with a pump octane rating of 86 or higher	See page 9
Engine oil	SAE 10W-30 API SJ or later	See page 6
Spark plug type	NGK– CMR5H	See page 17
Standard idle speed	2,900 ~ 3,300 rpm	Shop manual

Tune-up

Item	Description	Page
Spark plug gap	0.024 ~ 0.028 in (0.60 ~ 0.70 mm)	See page 17
Valve clearance (cold)	Intake: 0.0024 ~ 0.0039 in (0.060 ~ 0.100 mm) Exhaust: 0.0035 ~ 0.0051 in (0.090 ~ 0.130 mm)	See your authorized Honda servicing dealer
Other specifications	No other adjustments needed	

AVOIDING FUEL-RELATED PROBLEMS

When maintained properly, your Honda trimmer should provide years of trouble-free operation. This includes the fuel system. However, gasoline can quickly deteriorate, causing starting or running problems and, in some cases, damage to the fuel system. Most fuel-related problems can be avoided by following the precautions listed below. Fuel system damage and engine performance problems resulting from deteriorated fuel are not covered by the *Distributor's Limited Warranty* (see page 30).

Follow These Precautions to Prevent Most Fuel-Related Problems

During The Normal Trimming Season	Reason
Do not use gasoline containing more than 10% ethanol.	A high level of ethanol in gasoline attracts water and can corrode or damage the fuel system and cause performance problems.
Store gasoline in a clean, plastic, sealed container approved for fuel storage. Store your fuel supply container away from direct sunlight; if the container has a vent, keep it closed.	A clean plastic container will prevent rust and metallic contaminants from entering the fuel system. Gasoline will deteriorate faster when exposed to air and sunlight.
Purchase only enough gasoline to last for 30 to 60 days. If you purchase enough gasoline to last for more than 60 days, add a fuel stabilizer to your storage tank when you fill it.	Gasoline deteriorates with age, so try to avoid storing it for long periods, especially in summer heat. Fuel stabilizer will extend the shelf life of gasoline, but it will not reconstitute stale fuel.
When you finish trimming, completely fill the trimmer's fuel tank.	If the fuel tank is only partially filled, air in the tank will promote fuel deterioration.

3 to 4 Weeks Before Next Use	Reason
Completely fill the trimmer's fuel tank.	If the fuel tank is only partially filled, air in the tank will promote fuel deterioration.

1 to 3 Months Before Next Use	Reason
If you did not add fuel stabilizer to your fuel storage tank when you filled it up, fill your trimmer's fuel tank with fresh gasoline.	If the fuel tank is only partially filled, air in the tank will promote fuel deterioration.
Add fuel stabilizer to the trimmer's tank according to the stabilizer manufacturer's instructions.	Fuel stabilizer will extend the life of gasoline, but it will not reconstitute stale gasoline.
Run the engine outdoors for 10 minutes.	To make sure treated gasoline has replaced untreated gasoline throughout the fuel system.

More Than 3 Months Before Next Use	Reason
Drain the fuel tank into an approved container and then run the engine until the engine stops. Do not allow gasoline to remain in your trimmer for more than 3 months of inactivity.	All fuel stabilizers have a shelf life. It is good practice to empty the fuel system for long term inactivity.

If you have fuel left in your storage container at the end of the operating season, recycle the fuel into your car's fuel tank and dispose of it. We recommend Pro Honda Fuel Stabilizer, that has improved formulation with added corrosion protection (page 29).

CUSTOMER INFORMATION

Parts, Accessories, and Service Items

Contact an authorized Honda servicing dealer to purchase any of these (or other) Honda Genuine Service parts and other approved accessories for your trimmer. For a complete list of trimmer accessories, visit us at powerequipment.honda.com and click on TRIMMERS.

Replacement Parts

Item	Part Number	Notes
Spark plug	31915-Z0H-003	NGK CMR5H
Air filter	17211-Z0H-000 17211-Z0Z-000	HHT25S HHT35S
Cutting-line	72512-095-0855Q	0.095" spool 3 lb (855 ft)
	72512-095-0285Q	0.095" doughnut 1 lb (285 ft)
Kwik Loader, 8-inch pre-cut, square cutting-line	72581-VF9-09548 72581-VF9-10548 72581-VF9-13048	0.095 in. 50-pack 0.105 in. 50-pack 0.130 in. 30-pack

Accessories

Item	Part Number	Notes
Honda air filter oil (MOTUL)	08207-MTL-100	4 oz bottle
Barrier kit	06631-VH8-740	Use with saw blade (loop handle models only)
Kwik Loader Head	06725-VL3-D60	2-line standard on U-Type
Semi-Matic Head	72560-VH8-642AH	Standard on Loop Handle Type
HHT25S blades	72511-VF9-A02	3 tooth, 9” grass/weed
	72511-VF9-E00AH	22 tooth, 9” weed/brush
HHT35S blades	72511-VF9-B02	3 tooth, 10” grass/weed
	72511-VF9-B00AH	4 tooth, 10” grass/weed
	72511-VF9-D61	50 tooth, 10” weed/brush
	72511-VF9-F00AH	80 tooth, brush/wood
Debris shields	76247-VF9-D60	Use with 22 ~ 80 tooth saw blade only
	76247-VF9-E31	Use with 3 ~ 8 tooth grass/ weed/brush blade only

Service Items

Item	Part Number	Notes
SAE 10W-30 engine oil	08207-10W30	Honda Genuine recommended oil 1 qt.
Fuel stabilizer	08732-0800	For long term storage 8 oz.

Dealer Locator Information

To find an Authorized Honda Servicing Dealer anywhere in the United States:

Visit powerequipment.honda.com and click on Find a Dealer.

How to Contact Honda

Honda Power Equipment dealership personnel are trained professionals. They should be able to answer any question you may have. If you encounter a problem that your dealer does not solve to your satisfaction, please discuss it with the dealership's management. The Service Manager or General Manager can help. Almost all problems are solved in this way.

If you are dissatisfied with the decision made by the dealership's management, contact the Honda Power Equipment Customer Relations Office. You can write:

American Honda Motor Co., Inc.
Power Equipment Division
Customer Relations Office
4900 Marconi Drive
Alpharetta, GA 30005-8847

Or telephone: (770) 497-6400 M-F, 8:30 a.m. - 7:00 p.m. ET

When you write or call, please give us this information:

- Model and serial numbers (page 25)
- Name of the dealer who sold the trimmer to you
- Name and address of the dealer who services your trimmer
- Date of purchase
- Your name, address, and telephone number
- A detailed description of the problem

Honda Publications

These publications will give you information for maintaining and repairing your trimmer.

Owner’s Manual

Keep this owner’s manual handy so you can refer to it at any time. Consider this owner’s manual a permanent part of the trimmer; please give it to the new owner if you resell the trimmer.

The information and specifications included in this publication were in effect at the time of approval for printing. American Honda Motor Co., Inc. reserves the right, however, to discontinue or change specifications or design at any time without notice and without incurring any obligation whatever. No part of this publication may be reproduced without written permission.

Shop Manual

This manual covers complete maintenance and overhaul procedures. It is intended to be used by a skilled technician. Available through your Honda dealer or visit powerequipment.honda.com and click on Shop Manuals.

Parts Catalog

This manual provides complete, illustrated parts lists, and is available through your Honda dealer.

Frequently Asked Questions

The Honda Power Equipment web site provides additional information for users of Honda power equipment. Visit powerequipment.honda.com and click on FAQs or scan the QR code shown.

DISTRIBUTOR'S LIMITED WARRANTY

Honda Power Equipment

This warranty is limited to the following Honda Power Equipment products when distributed by American Honda Motor Co., Inc., Power Equipment Division, 4900 Marconi Drive, Alpharetta, Georgia 30005-8847, purchased at retail or placed in rental service on or after January 1, 2010.

PRODUCTS COVERED BY THIS WARRANTY	LENGTH OF WARRANTY (from date of original retail purchase)	
	PRIVATE RESIDENTIAL(1)	COMMERCIAL/ RENTAL/ INSTITUTIONAL
HHT25S, HHT35S (2).	24 months	12 months

(1) Private residential: Used in maintaining owner's primary and/or secondary residence. Any other use, including but not limited to informal "for hire" use, is considered commercial/rental/institutional use.
(2) Drive cable limited lifetime warranty is valid for the original purchaser only.

To Qualify for This Warranty:

The product must be purchased in the United States, Puerto Rico, or the U.S. Virgin Islands from American Honda or a dealer authorized by American Honda to sell those products. This warranty applies to first retail purchaser and each subsequent owner during the applicable warranty time period, unless noted otherwise.

What American Honda Will Repair or Replace Under Warranty:

American Honda will repair or replace, at its option, any part that is proven to be defective in material or workmanship under normal use during the applicable warranty time period. Warranty repairs and replacements will be made without charge for parts or labor. Anything replaced under warranty becomes the property of American Honda Motor Co., Inc. All parts replaced under warranty will be considered as part of the original product, and any warranty on those parts will expire coincident with the original product warranty.

To Obtain Warranty Service:

You must, at your expense, take the Honda Power Equipment product, accessory, replacement part, apparel, or the power equipment on which the accessory or replacement part is installed, and proof of purchase to any Honda Power Equipment dealer in the United States, Puerto Rico, or the U.S. Virgin Islands who is authorized to sell and/or service that product, during the dealer's normal business hours. To locate a dealer near you, visit our web site at PowerEquipment.Honda.com and click on Find a Dealer.
If you are unable to obtain warranty service or are dissatisfied with the warranty service you receive, contact the owner of the dealership involved; normally this will resolve the problem. However, if you should require further assistance, write or call the Power Equipment Customer Relations Department of American Honda Motor Co., Inc. See "How to Contact Honda" on page 29.

Exclusions:

1. Any damage or deterioration resulting from the following:
   - Neglect of the periodic maintenance as specified in this manual
   - Improper repair or maintenance
   - Operating methods other than those indicated in this product owner's manual
   - Increasing engine speed beyond factory specification
   - The use of non-genuine Honda parts, accessories, lubricants, and fluids other than those approved by Honda
   - Exposure of the product to soot and smoke, chemical agents, bird droppings, sea water, salt, or other corrosive environments.
   - Collision, fuel contamination or deterioration, neglect, unauthorized alteration, misuse, incorporation or use of unsuitable attachments or parts
   - Normal wear and tear (including, but not limited to, normal fading of painted or plated surfaces, sheet peeling, and other natural deterioration)
2. Consumable parts: Honda does not warrant parts deterioration due to normal wear and tear. The following parts are not covered by warranty (unless they are needed as a part of another warranted repair): spark plug, fuel filter, air cleaner element, clutch disc, tire, wheel bearing, recoil starter rope, cable, belt, cutter blade, oil, and grease.
3. Cleaning, adjustment, and normal periodic maintenance work (carburetor cleaning, engine oil draining, blade sharpening, belt and cable adjustments).
4. Any product that has ever been declared a total loss or sold for salvage by a financial institution or insurer.
5. Auger and paddle assemblies of snow throwers, tiller tines of roto-tillers, mower blades and mower deck housings, are specifically not warranted against impact damage, including but not limited to, abrasive damage.

Disclaimer of Consequential Damage and Limitation of Implied Warranties:

American Honda disclaims any responsibility for loss of time or use of the product, transportation, commercial loss, or any other incidental or consequential damage. Any implied warranties are limited to the duration of this written limited warranty. Some states do not allow limitations on how long an implied warranty lasts and/or do not allow the exclusion or limitation of incidental or consequential damages, so the above exclusions and limitations may not apply to you. This warranty gives you specific legal rights, and you may also have other rights which vary from state to state.

Honda Parts, Accessories, and Apparel

This warranty is limited to Honda Power Equipment parts, accessories, and apparel when distributed by American Honda Motor Co., Inc., 4900 Marconi Drive, Alpharetta, Georgia 30005-8847.

PRODUCTS COVERED BY THIS WARRANTY	LENGTH OF WARRANTY (from date of original retail purchase)	
	PRIVATE RESIDENTIAL	COMMERCIAL/ RENTAL/ INSTITUTIONAL
Parts	6 months	3 months
Accessories	12 months	3 months
Apparel	6 months	3 months

To Qualify for This Warranty:

1. The parts, accessories, or apparel must be purchased from American Honda or a dealer authorized by American Honda to sell those products in the United States, Puerto Rico, and the U.S. Virgin Islands. Parts and Accessories must be purchased for installation on original Honda equipment or engines to be eligible for warranty coverage. Installing parts and accessories on non-Honda products or engines voids this warranty.
2. You must be the first retail purchaser. This warranty is not transferable to subsequent owners.

What American Honda Will Repair or Replace Under Warranty:

American Honda will repair or replace, at its option, any Honda Power Equipment parts, accessories, replacement parts, or apparel that are proven to be defective in material or workmanship under normal use during the applicable warranty time period. Anything replaced under warranty becomes the property of American Honda Motor Co., Inc. The warranty on all parts, accessories, and apparel replaced under warranty will expire coincident with the original warranty on the replaced parts, accessories, or apparel.
Parts and accessories installed by a dealer who is authorized by American Honda to sell them will be repaired or replaced under warranty without charge for parts or labor. If installed by anyone else, parts and accessories will be repaired or replaced under warranty without charge for parts, but any labor charges will be the responsibility of the purchaser.
Apparel will be repaired or replaced under warranty without any charge.

To Obtain Warranty Service:

You must, at your expense, take the Honda Power Equipment part, accessory, apparel or the Honda Power Equipment on which the part or accessory is installed, and proof of purchase to any Honda Power Equipment dealer in the United States, Puerto Rico, or the U.S. Virgin Islands who is authorized to sell that product, during the dealer's normal business hours. To locate a dealer near you, visit our web site at PowerEquipment.Honda.com and click on Find a Dealer.
If you are unable to obtain warranty service or are dissatisfied with the warranty service you receive, contact the owner of the dealership involved; normally this will resolve the problem. However, if you should require further assistance, write or call the Power Equipment Customer Relations Department of American Honda Motor Co., Inc. See "How to Contact Honda" on page 29.

Exclusions:

This warranty does not extend to parts, accessories, or apparel affected or damaged by collision, normal wear, use in an application for which the product was not designed or any other misuse, neglect, incorporation or use of unsuitable attachments or parts, unauthorized alteration, improper installation, or any causes other than defects in material or workmanship of the product. Installing parts and accessories on non-Honda products or engines voids this warranty.

Disclaimer of Consequential Damage and Limitation of Implied Warranties:

American Honda disclaims any responsibility for loss of time or use of the product, or the power equipment on which the product is installed, transportation, commercial loss, or any other incidental or consequential damage. Any implied warranties are limited to the duration of this written warranty. Some states do not allow limitations on how long an implied warranty lasts and/or do not allow the exclusion or limitation of incidental or consequential damages, so the above exclusions and limitations may not apply to you.
This warranty gives you specific legal rights, and you may also have other rights which vary from state to state.

PWL50623-V

EMISSION SYSTEM WARRANTY

Your new Honda Power Equipment engine complies with the U.S. EPA, Environment Canada, and State of California (models certified for sale in California only) emission regulations. American Honda Motor Co., Inc. provides the emission warranty coverage for engines in the United States and its territories. Honda Canada Inc. provides the emission warranty for engines in the 13 provinces and territories of Canada. In the remainder of this Emission Control System Warranty, American Honda Motor Co., Inc. and Honda Canada Inc. will be referred to as Honda.

YOUR WARRANTY RIGHTS AND OBLIGATIONS:

CALIFORNIA

The California Air Resources Board and Honda are pleased to explain the emission control system warranty on your 2017 and later Honda Power Equipment engine. In California, new spark-ignited small off-road equipment engines must be designed, built, and equipped to meet the state's stringent anti-smog standards. Specific Honda products that do not meet the California emissions regulations can be identified by a “Not for sale in California” decal.

OTHER STATES, U.S. TERRITORIES, AND CANADA

In other areas of the United States and in Canada, your engine must be designed, built, and equipped to meet the U.S. EPA and Environment Canada emission standards for spark-ignited engines at or below 19 kilowatts.

ALL OF THE UNITED STATES AND CANADA

Honda must warrant the emission control system on your power equipment engine for the period of time listed below, provided there has been no abuse, neglect, or improper maintenance of your power equipment engine. Where a warrantable condition exists, Honda will repair your power equipment engine at no cost to you including diagnosis, parts, and labor.

Your emission control system may include such parts as the carburetor or fuel injection system, the ignition system, and catalytic converter. Also included may be hoses, connectors, and other emission-related assemblies.

OWNER'S WARRANTY RESPONSIBILITY:

As the power equipment engine owner, you are responsible for completing all required maintenance listed in your owner's manual. Honda recommends that you retain all receipts covering maintenance on your power equipment engine, but Honda cannot deny warranty coverage solely for the lack of receipts or for your failure to ensure that all scheduled maintenance has been completed.

As the power equipment engine owner, you should however be aware Honda may deny you warranty coverage if your power equipment engine or a part has failed due to abuse, neglect, improper maintenance, or unapproved modifications.

You are responsible for presenting your power equipment engine to a Honda Power Equipment dealer as soon as a problem exists. The emission related warranty repairs should be completed in a reasonable amount of time, not to exceed 30 days.

If you have any questions regarding your emission warranty rights and responsibilities, you should contact the Honda office in your region:

American Honda Motor Co., Inc.
Power Equipment Customer Relations
4900 Marconi Drive
Alpharetta, Georgia 30005-8847
Telephone: (888) 888-3139
Email: powerequipmentemissions@ahm.honda.com

or

Honda Canada Inc.
Power Equipment Customer Relations
180 Honda Blvd.
Markham, ON, L6C 0H9
Telephone: (888) 946-6329

WARRANTY COVERAGE:

Honda Power Equipment engines sold in the United States and Canada are covered by this warranty for a period of two years from the date of delivery to the original retail purchaser or the length of the Honda Distributor’s Limited Warranty, whichever is longer. This warranty is transferable to each subsequent purchaser for the duration of the warranty period.

If any emission-related part on your engine is defective, the part will be repaired or replaced by Honda without charge for diagnosis, parts, or labor. All defective parts replaced under this warranty become the property of Honda. Only Honda approved replacement parts may be used in the performance of any warranty repairs and must be provided without charge to the owner. Normal maintenance items, such as spark plugs and filters, that are on the warranted parts list are warranted up to their required replacement interval only.

Honda will also replace other engine components damaged by a failure of any warranted part during the warranty period.

The use of replacement parts not equivalent to the original parts may impair the effectiveness of your engine emission control system. If such a replacement part is used in the repair or maintenance of your engine, and an authorized Honda dealer determines it is defective or causes a failure of a warranted part, your claim for repair of your engine may be denied. If the part in question is not related to the reason your engine requires repair, your claim will not be denied.

TO OBTAIN WARRANTY SERVICE:

You must, at your own expense, take your Honda Power Equipment engine or the product on which it is installed, along with your sales registration card or other proof of original purchase date, to any Honda Power Equipment dealer who is authorized by Honda to sell and service that Honda product during their normal business hours. Claims for repair or adjustment found to be caused solely by defects in material or workmanship will not be denied because the engine was not properly maintained and used.

If you are unable to obtain emission warranty service or are dissatisfied with the warranty service you received, contact the owner of the dealership involved. Normally this should resolve your problem. However, if you require further assistance, contact the Honda office in your region. Refer to adjacent column for contact information.

EXCLUSIONS:

Failures other than those resulting from defects in material or workmanship are not covered by this warranty. This warranty does not extend to emission control systems or parts that are affected or damaged by owner abuse, neglect, improper maintenance, misuse, misfueling, improper storage, collision, the incorporation of, or use of, unsuitable attachments, or the unauthorized alteration of any part.

This warranty does not cover replacement of expendable maintenance items made in connection with required maintenance service after the item’s first scheduled replacement as listed in the maintenance section of the product owner’s manual, such as: spark plugs and filters.

DISCLAIMER OF CONSEQUENTIAL DAMAGE AND LIMITATION OF IMPLIED WARRANTIES:

American Honda Motor Co., Inc. and Honda Canada Inc. disclaim any responsibility for incidental or consequential damages such as loss of time or the use of the power equipment, or any commercial loss due to the failure of the equipment; and any implied warranties are limited to the duration of this written warranty. This warranty is applicable only where the California, U.S. EPA, or Environment Canada emission control system warranty regulation is in effect.

EMISSION CONTROL SYSTEM WARRANTY PARTS:

SYSTEMS COVERED BY THIS WARRANTY:	PARTS DESCRIPTION:
Fuel Metering	Carburetor assembly (includes starting enrichment system), Oxygen sensor, Throttle body, Engine temperature sensor, Engine control module, Fuel injector, Fuel regulator, Intake manifold
Evaporative	Fuel tank, Fuel cap, Fuel hoses, Vapor hoses, Carbon canister, Canister mounting brackets, Fuel strainer, Fuel valve, Fuel pump, Fuel hose joint, Canister purge hose joint
Exhaust	Catalyst, Exhaust pipe, Muffler (with catalyst)
Air Induction	Air cleaner case, Air cleaner element*
Ignition	Flywheel comp., Flywheel magneto, Ignition pulse generator, Crankshaft position sensor, Power coil, Ignition coil assembly, Ignition control module, Spark plug cap, Spark plug*
Crankcase Emission Control	Crankcase breather tube, Breather valve assembly, Oil filler cap
Miscellaneous Parts	Tubing, fittings, seals, gaskets, and clamps associated with these listed systems.

Note: This list applies to parts supplied by Honda and does not cover parts supplied by the equipment manufacturer. Please see the original equipment manufacturer’s emissions warranty for non-Honda parts.

* Covered up to the first required replacement only. See the *MAINTENANCE SCHEDULE* on page 15.

PWL50975-R

NOTES

NOTES

PRODUCT REGISTRATION

Thank you for choosing Honda. To ensure you receive important service information in the event of a product update or recall, please register your trimmer within 30 days of purchase.

From time to time, American Honda conducts sales promotions that require you to register your trimmer within 30 days of purchase. If you purchased your Honda trimmer during one of these promotions, you must register your trimmer within 30 days.

Your information will remain confidential. It will not be released to any other company or organization.

Failure to register your trimmer does not diminish your warranty rights.

Please complete and mail the postage paid card or register online at powerequipment.honda.com

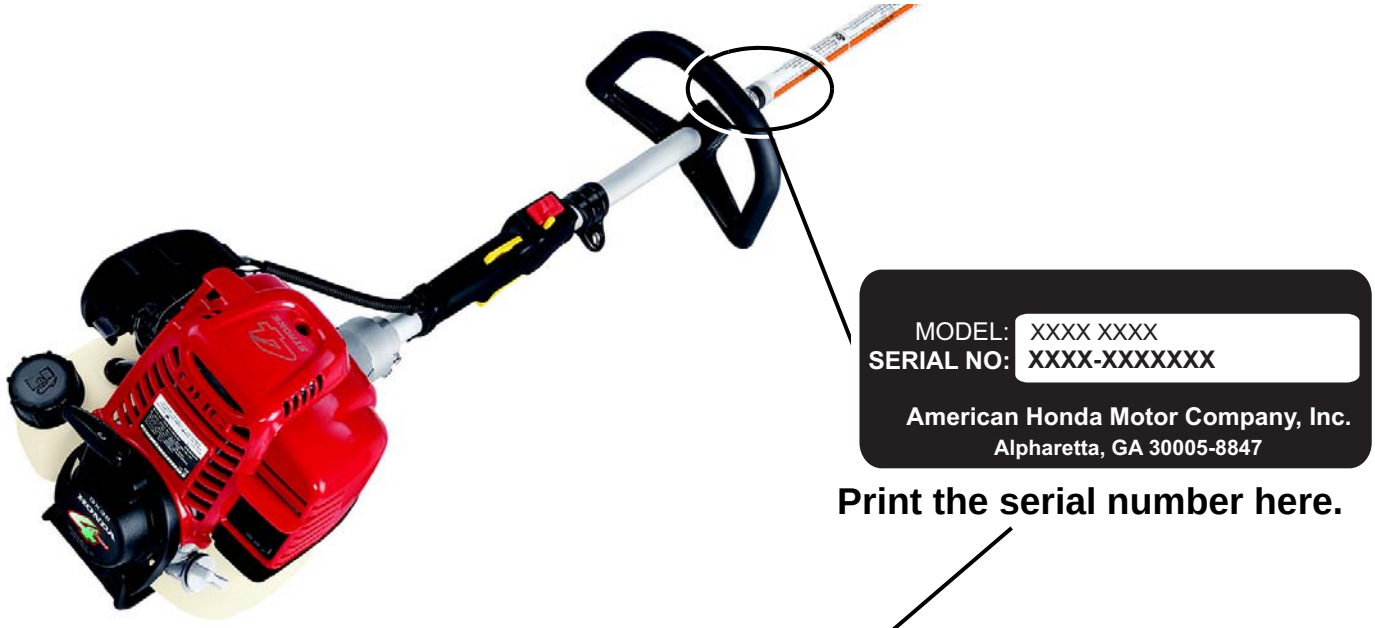

Print the serial number here.

Serial number

*** Dealer Store number**

*** Dealer ZIP code**

***If available**

Owner's Last Name

First Name

Company Name *(commercial/rental users)*

Telephone ( ) —

Address

City

State

ZIP Code —

E-mail address

Date of Purchase — — MONTH DAY YEAR

Purchased Via *(check one)* **In Store** **Online**

Application *(check one)* **Commercial** *(professional use)* **Non-commercial** *(private, homeowner use)* **Rental** *(for-hire use)*

1. Go to www.PowerEquipment.Honda.com to register your unit.

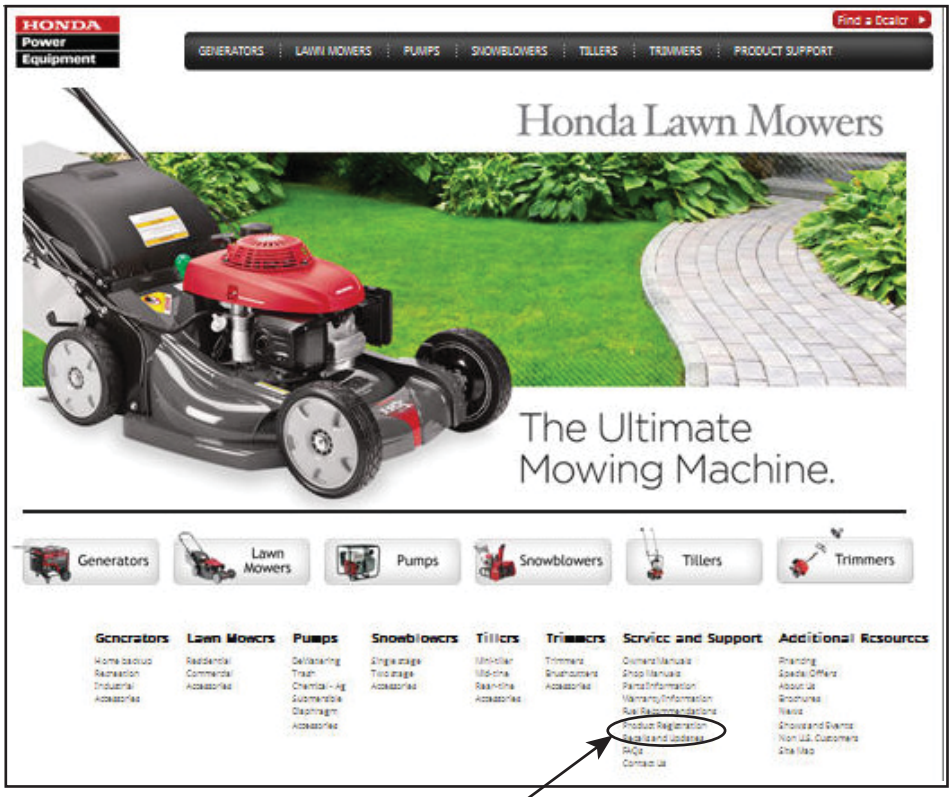

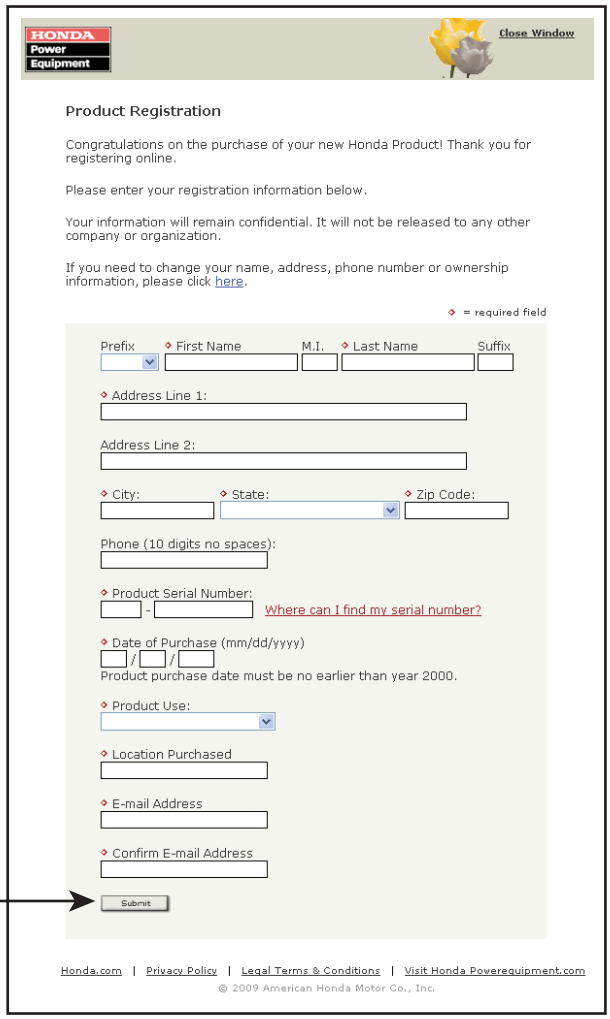

2. Click on **Product Registration**.
3. Complete the required information and click **Submit**. It's that simple!

Product Registration

NO POSTAGE
NECESSARY
IF MAILED
IN THE
UNITED STATES

BUSINESS REPLY MAIL
FIRST-CLASS MAIL PERMIT NO. 117 ALPHARETTA GA
POSTAGE WILL BE PAID BY ADDRESSEE

Power Equipment Division
American Honda Motor Co. Inc.
4900 Marconi Dr
Alpharetta GA 30005-9956

EM5

HPE.2017.02
PRINTED IN U.S.A.