HONDA MARINE

BF115D•BF135A•BF150A Owner's Manual

Click to Save As

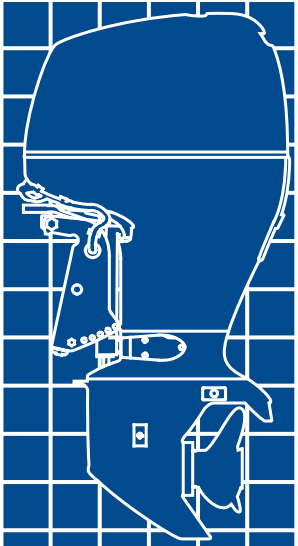

Includes US and Canadian Models

© 2016 Honda Motor Co., Ltd. – All Rights Reserved

⚠ WARNING

The engine exhaust from this product contains chemicals known to the State of California to cause cancer, birth defects, or other reproductive harm.

California Proposition 65

This product contains or emits chemicals known to the state of California to cause cancer, birth defects or other reproductive harm

Keep this Owner's Manual handy, so you can refer to it at any time. This Owner's Manual is considered a permanent part of the outboard motor and should remain with the outboard motor if resold.

The information and specifications included in this publication were in effect at the time of approval for printing. Honda Motor Co., Ltd. reserves the right, however, to discontinue or change specifications or design at any time without notice and without incurring any obligation whatever. No part of this publication may be reproduced without written permission.

INTRODUCTION

Congratulations on your selection of a Honda outboard motor. We are certain you will be pleased with your purchase of one of the finest outboard motors on the market.

We want to help you get the best results from your new outboard motor and to operate it safely. This manual contains information on how to do that; please read it carefully.

As you read this manual you will find information preceded by a **NOTICE** symbol. That information is intended to help you avoid damage to your outboard motor, other property, or the environment.

We suggest you read the warranty policy to fully understand its coverage and your responsibilities of ownership.

When your outboard motor needs scheduled maintenance, keep in mind that your Honda Marine dealer is specially trained in servicing Honda outboard motors. Your Honda Marine dealer is dedicated to your satisfaction and will be pleased to answer your questions and concerns.

Best Wishes,
Honda Motor Co., Ltd.

A FEW WORDS ABOUT SAFETY

Your safety and the safety of others are very important. And using this outboard motor safely is an important responsibility.

To help you make informed decisions about safety, we have provided operating procedures and other information on labels and in this manual. This information alerts you to potential hazards that could hurt you or others.

Of course, it is not practical or possible to warn you about all the hazards associated with operating or maintaining an outboard motor. You must use your own good judgment.

You will find important safety information in a variety of forms, including:

- **Safety Labels** – on the outboard motor.
- **Safety Messages** – preceded by a safety alert symbol ⚠ and one of three signal words, DANGER, WARNING, or CAUTION.

  These signal words mean:

⚠ DANGER	You WILL be KILLED or SERIOUSLY HURT if you don't follow instructions.
⚠ WARNING	You CAN be KILLED or SERIOUSLY HURT if you don't follow instructions.
⚠ CAUTION	You CAN be HURT if you don't follow instructions.

- **Safety Headings** – such as *IMPORTANT SAFETY INFORMATION.*
- **Safety Section** – such as *OUTBOARD MOTOR SAFETY.*
- **Instructions** – how to use this outboard motor correctly and safely.

This entire book is filled with important safety information – please read it carefully.

CONTENTS

OUTBOARD MOTOR SAFETY 7
IMPORTANT SAFETY INFORMATION 7
SAFETY LABEL LOCATION 9

CONTROLS AND FEATURES 11
CONTROL AND FEATURE IDENTIFICATION CODES 11
HOW TO DETERMINE WHICH DIRECTION THE PROPELLER SHAFT ROTATES 12
COMPONENT AND CONTROL LOCATIONS ... 13
CONTROLS 17
Side-Mount Type
Ignition Switch 17
Emergency Stop Switch Clip and Emergency Stop Switch 17
Gearshift/Throttle Control Lever 18
Fast Idle Lever 19
Panel-Mount Type
Ignition Switch 20
Emergency Stop Switch Clip and Emergency Stop Switch 21
Gearshift/Throttle Control Lever 22
Fast Idle Button 23
Top-Mount Type
Ignition Switch 24
Emergency Stop Switch Clip and Emergency Stop Switch 24
Gearshift/Throttle Control Lever 25
Fast Idle Button 27
Common Controls
Power Trim/Tilt Switch 28
Power Tilt Switch 29
Manual Relief Valve 29
Tilt Lock Lever 29
TRL (Trolling) Control Switch 30
Engine Cover Latch 30
Trim Tab 31
INSTRUMENTS 31
Trim Meter (optional equipment) 31
Tachometer (optional equipment) 31
NMEA Interface Coupler 32
Operating Hour Notification System 32

CONTENTS

INDICATORS 35
Alternator (ACG) Indicator 35
Malfunction Indicator 35
Oil Pressure Indicator 36
Overheat Indicator 36
Cooling System Indicator 37
OTHER FEATURES 37
Water Separator Buzzer 37
Rev Limiter 38
Anodes 38
Fuel Priming Bulb 38

BEFORE OPERATION 39
ARE YOU READY TO GET UNDERWAY? 39
IS YOUR OUTBOARD MOTOR READY TO GO? 39

OPERATION 41
SAFE OPERATING PRECAUTIONS 41
BREAK-IN PROCEDURE 41
FUEL PRIMING 42
INFREQUENT OR OCCASIONAL USE 42
STARTING THE ENGINE 43
Side-Mount Type 43
Panel-Mount Type 46
Top-Mount Type 48
STOPPING THE ENGINE 51
Emergency Engine Stopping 51
Normal Engine Stopping 52
GEARSHIFT AND THROTTLE OPERATION 53
STEERING 54
CRUISING 55
Trolling Speed Control 57
TRIM TAB 58
SHALLOW WATER OPERATION 58
MOORING, BEACHING, LAUNCHING 59
MULTIPLE OUTBOARD MOTORS 60

SERVICING YOUR OUTBOARD MOTOR 61
THE IMPORTANCE OF MAINTENANCE 61
MAINTENANCE SAFETY 62
TOOL KIT and OWNER'S MANUAL 63
SPARE EMERGENCY STOP SWITCH CLIP (optional equipment) 63
MAINTENANCE SCHEDULE 64
TRIM TAB ADJUSTMENT 66
MANUAL RELIEF VALVE 67
ENGINE COVER REMOVAL AND INSTALLATION 67
Engine Oil Level Check 68
Engine Oil Change 69
Oil Filter Change 71
Engine Oil Recommendations 72
Lubrication Points 73
Spark Plug Service 75
REFUELING 78
FUEL RECOMMENDATIONS 79
Fuel Filter Inspection and Replacement 80
Water Separator Inspection and Service 83
Anode Replacement 85
Propeller Replacement 85

CLEANING AND FLUSHING 87
Cleaning and Flushing 87

STORAGE 89
Fuel 89
Engine Oil 91
HOISTING THE OUTBOARD MOTOR 92
STORAGE PRECAUTIONS 92
REMOVAL FROM STORAGE 93

CONTENTS

TRANSPORTING 94
WITH OUTBOARD MOTOR INSTALLED ON BOAT 94
WITH OUTBOARD MOTOR REMOVED FROM BOAT 94

TAKING CARE OF UNEXPECTED PROBLEMS 95
ELECTRIC STARTER WILL NOT OPERATE 95
ENGINE WILL NOT START 96
HARD STARTING OR STALLS AFTER STARTING 98
ENGINE OVERHEATS 99
FUSES 100
Electric Starter Will Not Operate 100
Battery Will Not Charge 100
Fuse Replacement 100
OIL PRESSURE INDICATOR GOES OFF AND ENGINE SPEED IS LIMITED 102
OVERHEAT INDICATOR COMES ON AND ENGINE SPEED IS LIMITED 103
WATER SEPARATOR BUZZER SOUNDS 105
SUBMERGED OUTBOARD MOTOR 105

TECHNICAL INFORMATION 107
Serial Number Locations 107
Battery 108
Emission Control System Information 108
Star Label 111
Specifications 113

CONSUMER INFORMATION 116
Dealer Locator Information 116
Honda Publications 116
Customer Service Information 117
Warranty Statements 119
Distributor's Limited Warranty 119
Emission Control System Warranty 124
Distributor's Warranty 128

INDEX 131

IMPORTANT SAFETY INFORMATION

Honda BF115D/BF135A and BF150A outboard motors are designed for use with boats that have a suitable manufacturer's power recommendation. Other uses can result in injury to the operator or damage to the outboard motor and other property.

Most injuries or property damage can be prevented if you follow all instructions in this manual and on the outboard motor. The most common hazards are discussed in this chapter, along with the best way to protect yourself and others.

Operator Responsibility

- It is the operator's responsibility to provide the necessary safeguards to protect people and property. Know how to stop the engine quickly in case of emergency. Understand the use of all controls.
- Stop the engine immediately if anyone falls overboard, and do not run the engine while the boat is near anyone in the water.
- Always stop the engine if you must leave the controls for any reason.
- Attach the emergency stop switch lanyard securely to the operator.
- Always wear a PFD (Personal Flotation Device) while on the boat.
- Familiarize yourself with all laws and regulations relating to boating and the use of outboard motors.
- Be sure that anyone who operates the outboard motor receives proper instruction.
- Be sure the outboard motor is properly mounted on the boat.
- Do not remove the engine cover while the engine is running.

Refuel With Care

- Gasoline is extremely flammable, and gasoline vapor can explode. Refuel outdoors, in a well-ventilated area, with the engine stopped. Never smoke near gasoline, and keep other flames and sparks away.
- Refuel carefully to avoid spilling fuel. Avoid overfilling the fuel tank.
- After refueling, tighten the filler cap securely. If any fuel is spilled, make sure the area is dry before starting the engine.

Carbon Monoxide Hazard

Exhaust contains poisonous carbon monoxide, a colorless, odorless gas. Breathing carbon monoxide can cause loss of consciousness and may lead to death.

If you run the engine in an area that is confined, or even partly enclosed, the air you breathe could contain a dangerous amount of exhaust gas.

Never run your outboard inside a garage or other enclosure.

SAFETY LABEL LOCATION
US, Puerto Rico, and US Virgin Islands Types

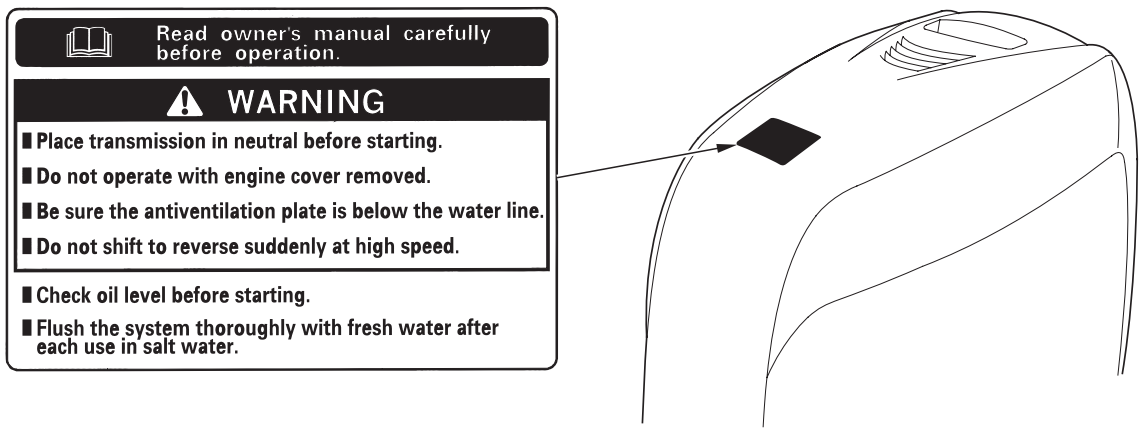

The label shown here contains important safety information. Please read it carefully. This label is considered a permanent part of your outboard motor. If the label comes off or becomes hard to read, contact an authorized Honda Marine dealer for a replacement.

Canadian Types

READ OWNER'S MANUAL

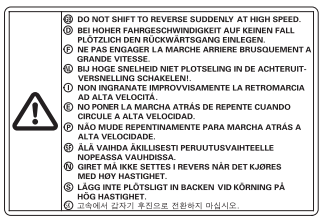

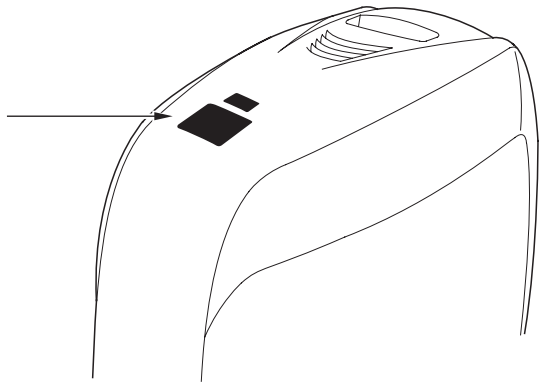

The labels shown here contain important safety information. Please read them carefully. These labels are considered permanent parts of your outboard motor. If a label comes off or becomes hard to read, contact an authorized Honda Marine dealer for a replacement.

- **Honda outboard motor is designed to give safe and dependable service if operated according to instructions. Read and understand the Owner's Manual before operating the outboard motor. Failure to do so could result in personal injury or equipment damage.**

CONTROL AND FEATURE IDENTIFICATION CODES

Model		BF115D					BF135A					BF150A					
Type		LA	LC	XA	XC	XCA	LA	LC	XA	XC	XCA	LA	LC	XA	XC	XCA	XCC
Transom Height	20.0 in (508 mm)	●	●				●	●				●	●				
	25.0 in (635 mm)			●	●	●			●	●	●			●	●	●	●
Standard Rotating Propeller Shaft		●	●	●	●		●	●	●	●		●	●	●	●		
Counterrotating Propeller Shaft						●					●					●	●
Power Trim/Tilt		●	●	●	●	●	●	●	●	●	●	●	●	●	●	●	●

Refer to this chart for an explanation of the Type Codes used in this manual to identify control and feature applications.

TYPE CODE (example)

X C A

- A — Destination
  A: American, C: Canadian
- C — Rotating direction of propeller shaft
  C: Counterrotating propeller shaft
  None: Standard rotating propeller shaft
- X — Transom Height
  L: 20.0 in (508 mm), X: 25.0 in (635 mm)

HOW TO DETERMINE WHICH DIRECTION THE PROPELLER SHAFT ROTATES

The direction the propeller shaft rotates can be determined based on whether or not the shaft has a groove.
With groove: Counterrotating
Without groove: Standard rotating

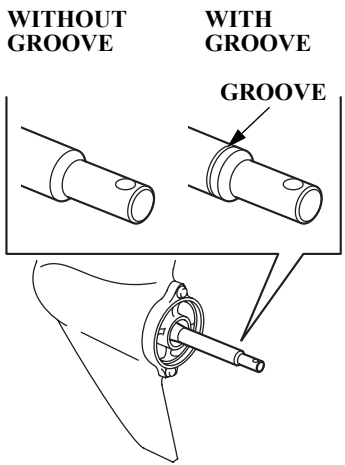

COMPONENT AND CONTROL LOCATIONS

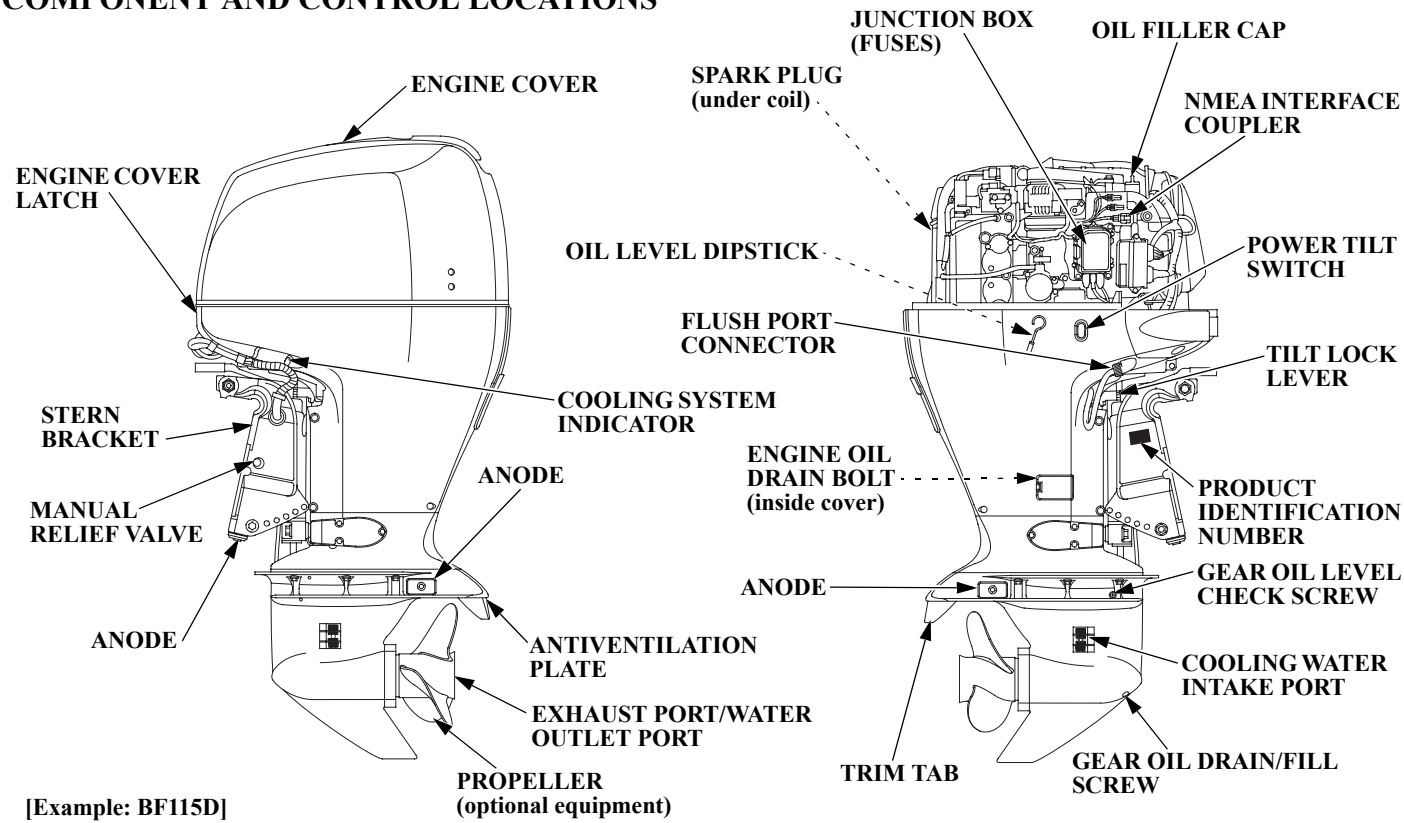

[Example: BF115D]

Remote Controls (optional equipment)

Side-Mount Control Type

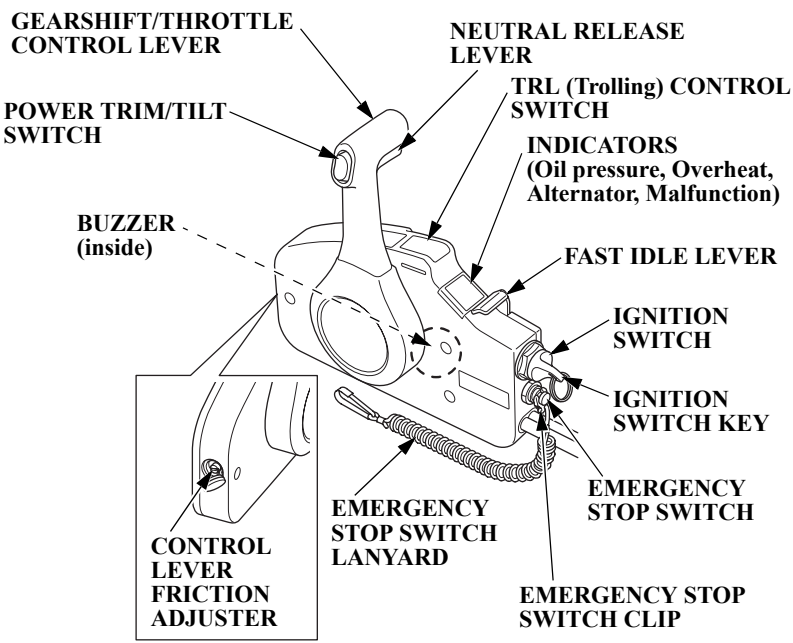

Panel-Mount Control Type

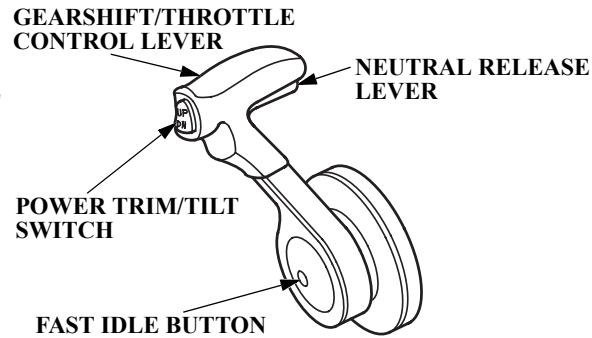

Control Panel (for Panel-Mount Type)

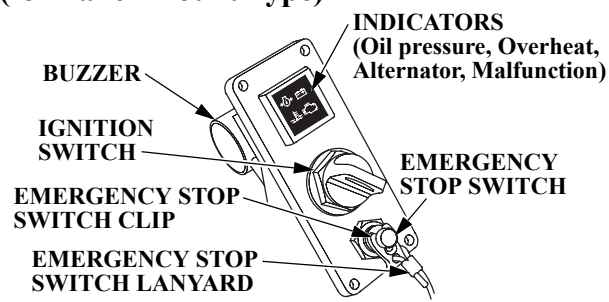

Top-Mount Type
(Single Outboard Motor Type)

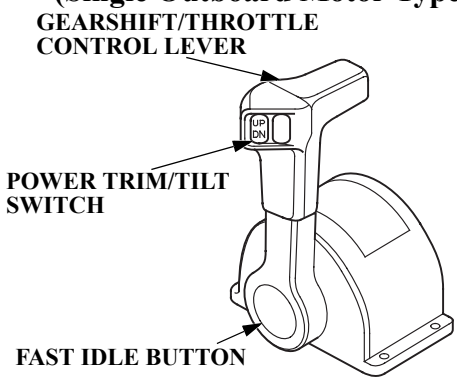

Control Panel
(Top-Mount Single Type)

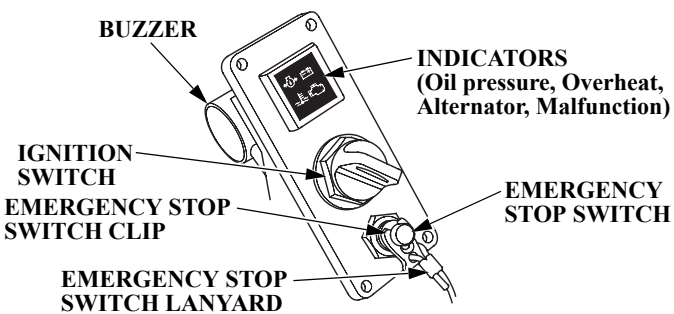

(Dual Outboard Motor Type)

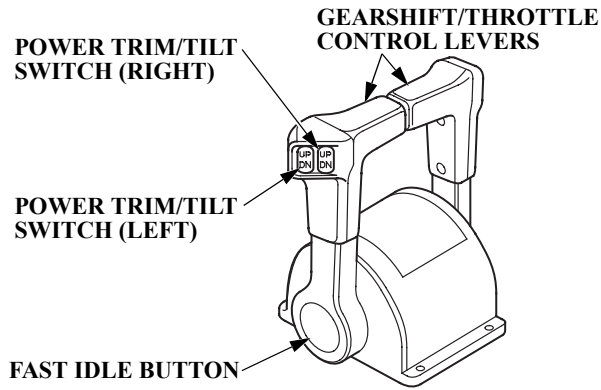

(for Top-Mount Dual Type)

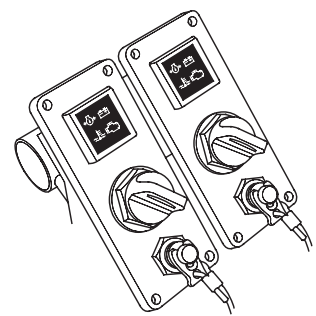

Instruments (optional equipment)

Tachometer

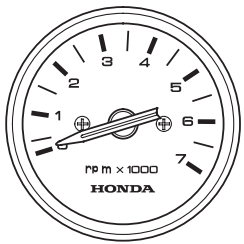

Trim Meter

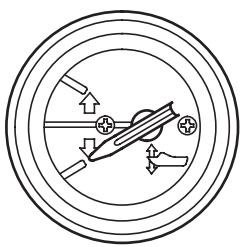

Trolling Control Switch Panel

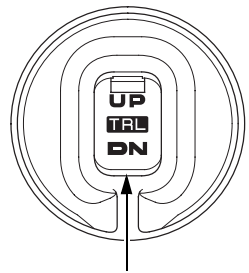

TRL (Trolling) CONTROL SWITCH

CONTROLS

Side-Mount Type

Ignition Switch

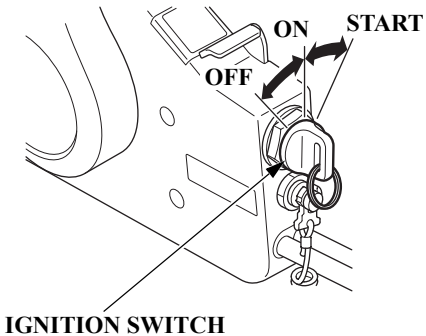

The ignition switch controls the ignition system and the starter motor.

Turning the ignition switch key to the START position operates the starter motor. The key automatically returns to the ON position when released from the START position.

The engine will not start unless the gearshift/throttle control lever is in the N (neutral) position (p. 43) and the emergency stop switch clip is in the emergency stop switch.

Turning the ignition switch to the OFF position stops the engine.

Emergency Stop Switch Clip and Emergency Stop Switch

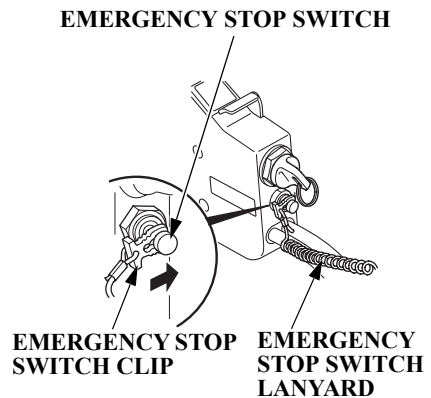

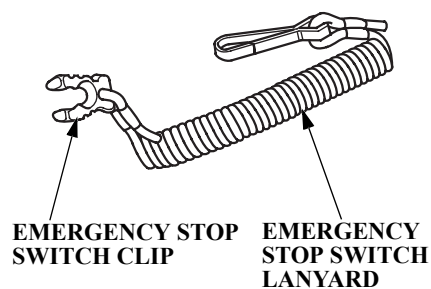

The emergency stop switch clip must be inserted in the emergency stop switch in order for the engine to start and run. The emergency stop switch lanyard must be attached securely to the operator or to the operator's PFD (Personal Flotation Device).

When used as described, the emergency stop switch clip and emergency stop switch lanyard system stops the engine if the operator falls away from the controls.

A spare switch clip (optional equipment) can be stored in the tool bag.

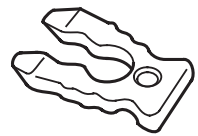

SPARE SWITCH CLIP
(optional equipment)

Gearshift/Throttle Control Lever

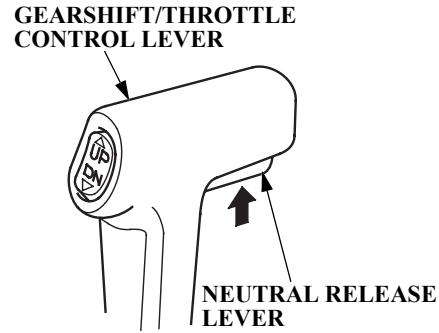

The gearshift/throttle control lever controls engine speed and selects F (forward), N (neutral), or R (reverse) gears.

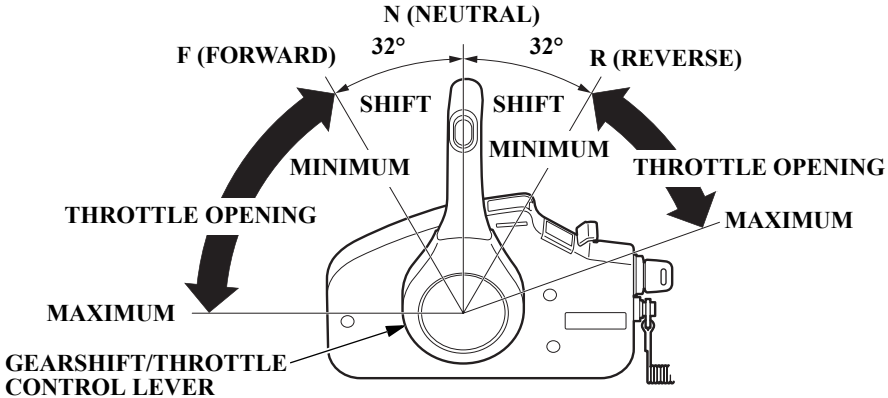

Moving the control lever 32° from N (neutral) selects the gear, and further movement increases engine speed.

The control lever automatically locks itself in the N (neutral) position. To move the lever out of the N (neutral) position, you must squeeze the neutral release lever on the underside of the lever handle.

A friction adjuster adjusts the operating resistance of the control lever. Refer to p. 54.

Less friction allows easier control lever movement. More friction helps to hold a steady throttle setting while cruising.

Fast Idle Lever

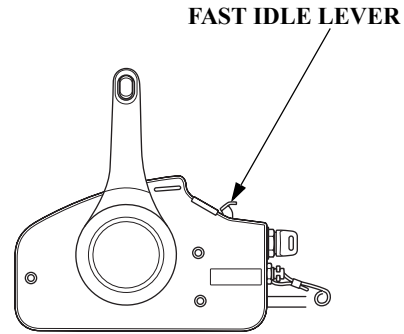

Use the fast idle lever to accelerate engine warm-up after starting the engine. Do not use the fast idle lever when starting the engine.

See page 45 for engine warm-up instructions.

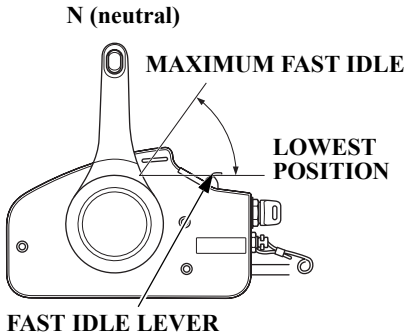

The fast idle lever allows you to increase the idle speed only when the control lever is in the N (neutral) position. Place the fast idle lever in its lowest position to cancel the fast idle and return the control lever to normal operation.

Panel-Mount Type

Ignition Switch

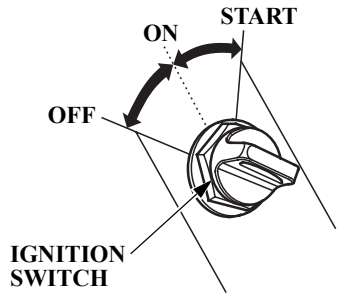

The ignition switch controls the ignition system and the starter motor.

Turning the ignition switch key to the START position operates the starter motor. The key automatically returns to the ON position when released from the START position.

The engine will not start unless the gearshift/throttle control lever is in the N (neutral) position (p. 46) and the emergency stop switch clip is in the emergency stop switch.

Turning the ignition switch to the OFF position stops the engine.

Emergency Stop Switch Clip and Emergency Stop Switch

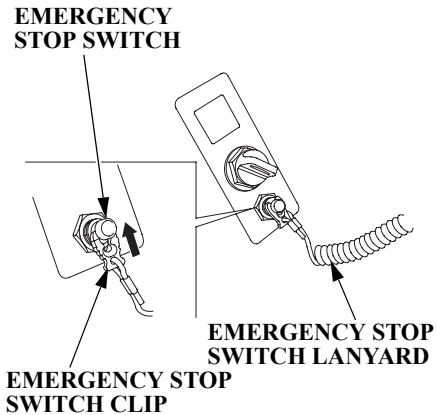

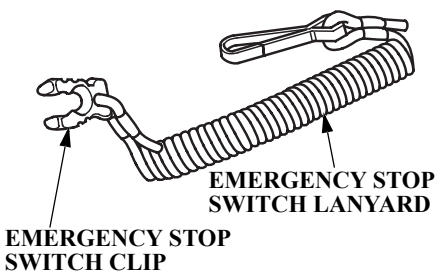

The emergency stop switch clip must be inserted in the emergency stop switch in order for the engine to start and run. The emergency stop switch lanyard must be attached securely to the operator or to the operator's PFD (Personal Flotation Device).

When used as described, the emergency stop switch clip and emergency stop switch lanyard system stops the engine if the operator falls away from the controls.

A spare switch clip (optional equipment) can be stored in the tool bag.

SPARE SWITCH CLIP
(optional equipment)

Gearshift/Throttle Control Lever

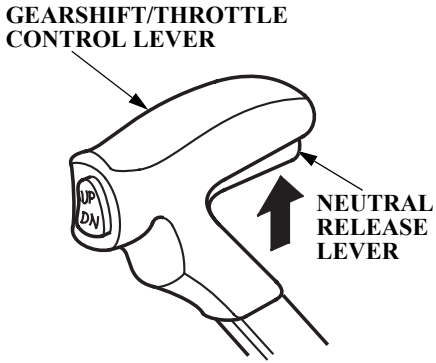

The gearshift/throttle control lever controls engine speed and selects F (forward), N (neutral), or R (reverse) gears.

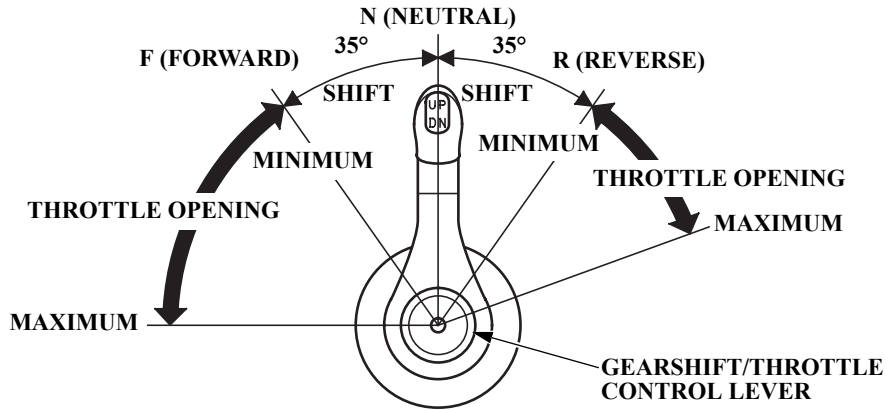

Moving the control lever 35° from N (neutral) selects the gear, and further movement increases engine speed.

The control lever automatically locks itself in the N (neutral) position. To move the lever out of the N (neutral) position, you must squeeze the neutral release lever on the underside of the lever handle.

A friction adjuster near the base of the control lever adjusts the operating resistance of the control lever. Refer to p. 54.

Less friction allows easier control lever movement. More friction helps to hold a steady throttle setting while cruising.

Fast Idle Button

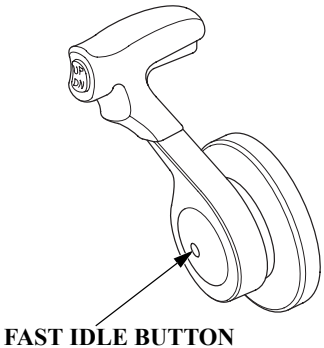

Use the fast idle button to accelerate engine warm-up after starting the engine. Do not use the fast idle button when starting the engine.

See page 47 for engine warm-up instructions.

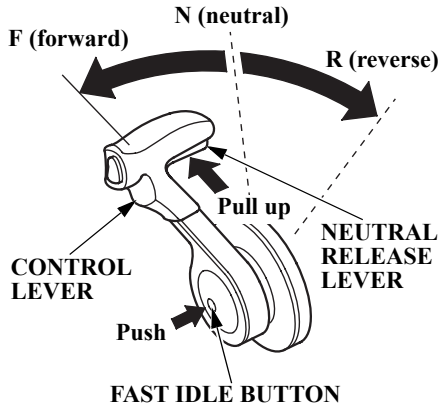

The fast idle button allows you to increase the idle speed without engaging the drive gears. Move the control lever forward or reverse after pushing in the fast idle button to increase the idle speed.

It is necessary to position the control lever in the N (neutral) position to push in the fast idle button.

Return the control lever to N (neutral) position to cancel the fast idle operation.

Top-Mount Type

Ignition Switch

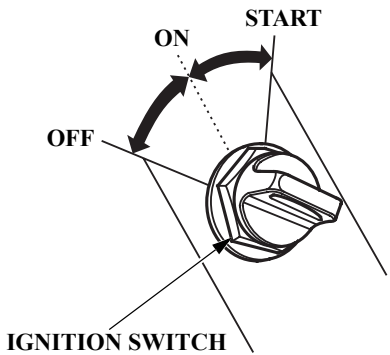

The ignition switch controls the ignition system and the starter motor.

Turning the ignition switch key to the START position operates the starter motor. The key automatically returns to the ON position when released from the START position.

The engine will not start unless the gearshift/throttle control lever is in the N (neutral) position (p. 49) and the emergency stop switch clip is in the emergency stop switch.

Turning the ignition switch to the OFF position stops the engine.

Emergency Stop Switch Clip and Emergency Stop Switch

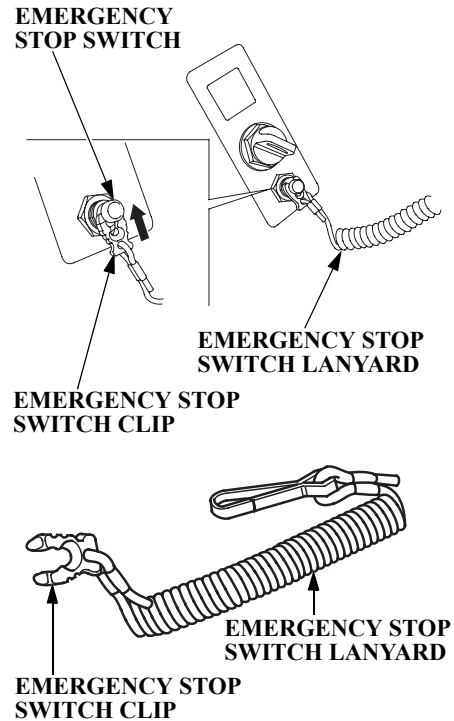

The emergency stop switch clip must be inserted in the emergency stop switch in order for the engine to start and run. The emergency stop switch lanyard must be attached securely to the operator or to the operator's PFD (Personal Flotation Device).

When used as described, the emergency stop switch clip and emergency stop switch lanyard system stops the engine if the operator falls away from the controls.

A spare switch clip (optional equipment) can be stored in the tool bag.

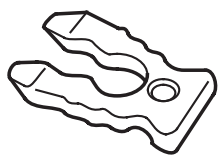

SPARE SWITCH CLIP
(optional equipment)

Gearshift/Throttle Control Lever

SINGLE TYPE

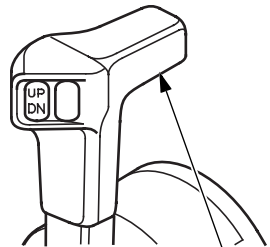

GEARSHIFT/THROTTLE CONTROL LEVER

DUAL TYPE

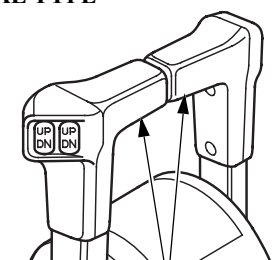

GEARSHIFT/THROTTLE CONTROL LEVERS

The gearshift/throttle control lever(s) controls engine speed and selects F (forward), N (neutral), or R (reverse) gears.

Moving the control lever 35° from N (neutral) selects the gear, and further movement increases engine speed.

A friction adjuster inside the control box adjusts the operating resistance of the control lever(s). Refer to p. 54.

Less friction allows easier control lever movement. More friction helps to hold a steady throttle setting while cruising.

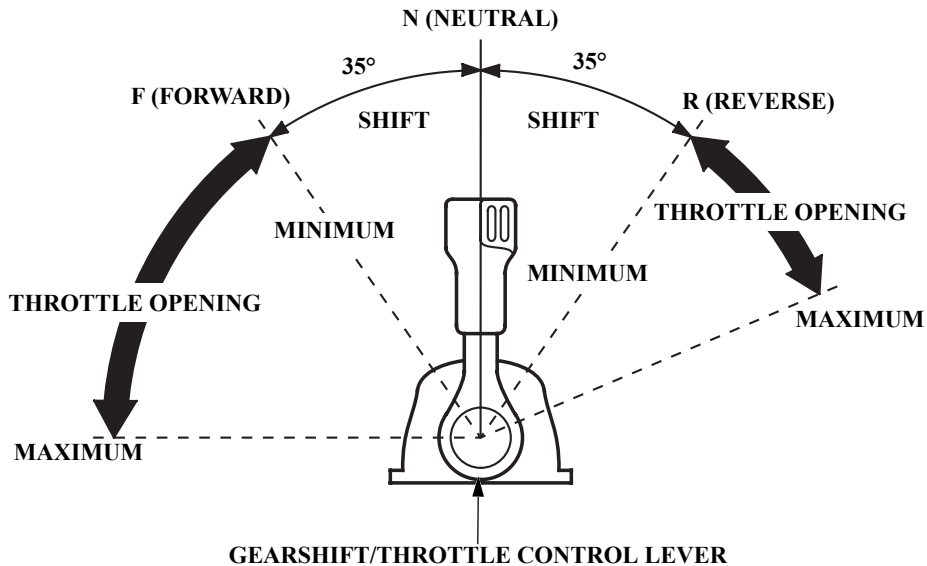

Fast Idle Button

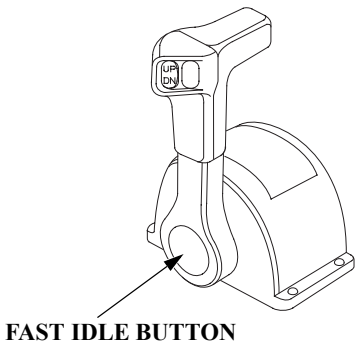

Use the fast idle button to accelerate engine warm-up after starting the engine. Do not use the fast idle button when starting the engine.

See page 50 for engine warm-up instructions.

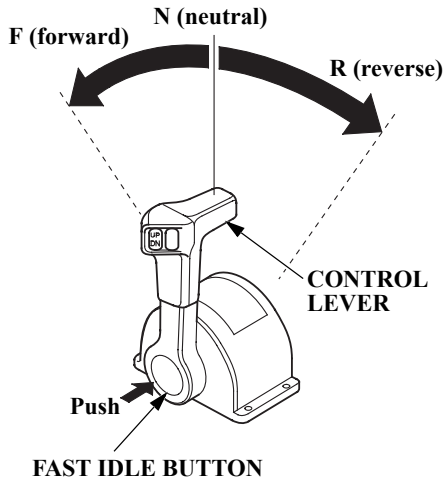

The fast idle button allows you to increase the idle speed without engaging the drive gears. Move the control lever forward or reverse after pushing in the fast idle button to increase the idle speed.

It is necessary to position the control lever in the N (neutral) position to push in the fast idle button.

Return the control lever to N (neutral) position to cancel the fast idle operation.

Common Controls

Power Trim/Tilt Switch

(Side-Mount Type)

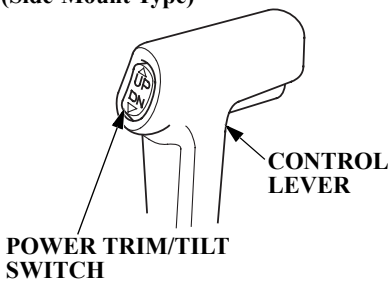

(Panel-Mount Type)

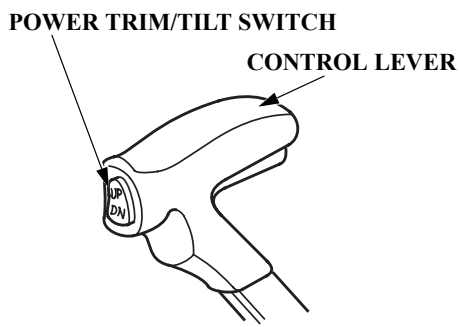

(Top-Mount Type)

SINGLE TYPE

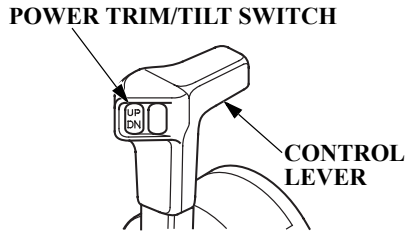

DUAL TYPE

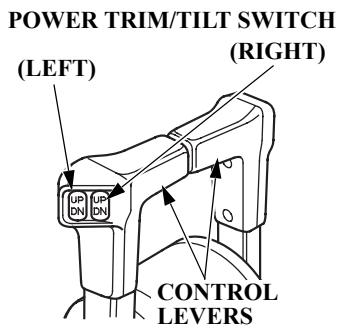

The power trim/tilt switch is located on the control lever. It is a rocker switch with UP and DN (down) positions for changing the angle of the outboard motor.

You can use the power trim/tilt switch anytime whether the boat is underway, stopped, or the ignition switch is in the OFF position. It is necessary for the ignition switch to be in the ON position for the trim meter to indicate the outboard motor angle.

Trim the outboard motor to obtain the best performance and stability (p. 55).

Tilt the outboard motor for shallow water operation, beaching, launching, or mooring.

For dual mount outboard motors, tilt them up at the same time.

Power Tilt Switch

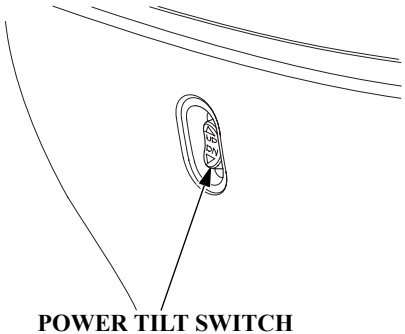

The power tilt switch is located on the engine pan. It is a rocker switch with UP and DN (down) positions for changing the angle of the outboard motor.

The power tilt switch will operate without turning the ignition switch ON.

This switch is used with the engine stopped to raise the outboard motor for mooring, trailering, or maintenance.

Manual Relief Valve

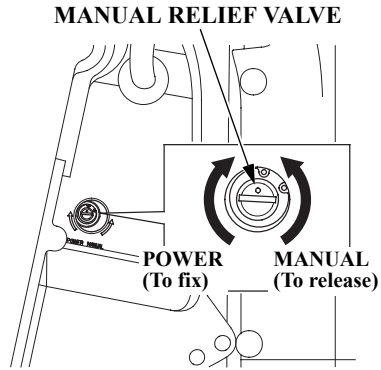

The outboard motor can be tilted manually after opening the manual relief valve. This allows the outboard motor to be tilted up or down when no battery is connected.

Check that nobody is under the outboard motor before opening the manual relief valve. If the manual relief valve is loosened (turned counterclockwise) when the outboard motor is tilted up, the outboard motor will suddenly tilt down.

Tilt Lock Lever

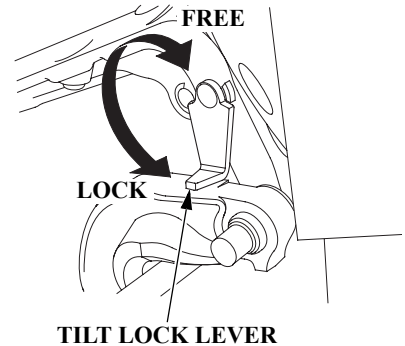

The tilt lock lever is used to support the outboard motor in the fully-raised position.

When the boat is to be moored for a long time, tilt the outboard motor up as far as it will go. Then move the tilt lock lever to the LOCK position, and gently lower the outboard motor until the lever contacts the stern bracket.

TRL (Trolling) Control Switch (optional equipment; based on control box)

Remote Control Box (Side-mount type)

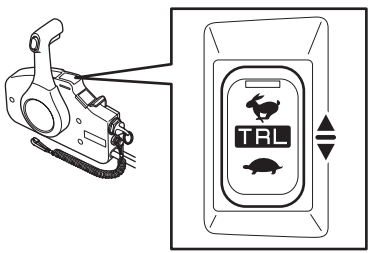

TRL (Trolling) CONTROL SWITCH

Trolling Control Switch Panel (optional equipment)

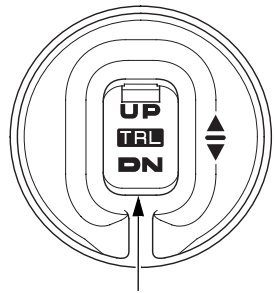

TRL (Trolling) CONTROL SWITCH

The TRL (Trolling) control switch is a rocker switch with UP and DN (down) positions to adjust the trolling speed up or down in 50 rpm increments within the range of 650 to 900 rpm.

If you press and hold the TRL control switch while cruising with the throttle closed, the mode changes to trolling mode (p. 57).

Engine Cover Latch

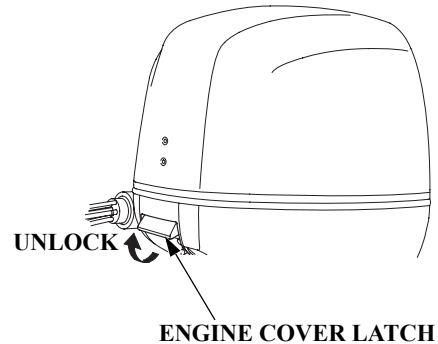

ENGINE COVER LATCH

The engine cover latch fastens the engine cover to the outboard motor.

Trim Tab

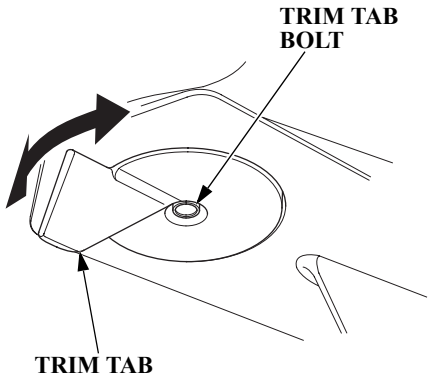

The trim tab compensates for ‘‘torque steer,’’ which is a reaction of the outboard motor to propeller rotation.

If uncompensated, torque steer would make the outboard motor tend to turn to one side.

When the trim tab is correctly adjusted (p. 66), steering effort is equal in both directions.

INSTRUMENTS

Trim Meter (optional equipment)

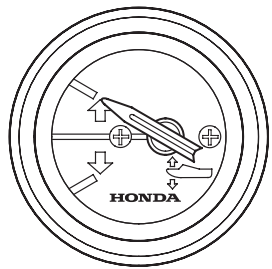

The trim meter indicates the relative trim angle of the outboard motor.

Refer to the trim meter when using the power trim/tilt switch to achieve the best performance from the boat.

Tachometer (optional equipment)

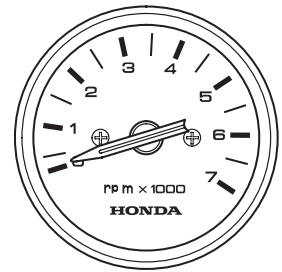

The tachometer shows engine speed in revolutions per minute.

Refer to the tachometer when using the throttle and power trim/tilt controls to achieve the best performance from the boat.

NMEA Interface Coupler

The NMEA2000® interface coupler can provide information regarding engine speed, fuel consumption, and various warnings to an existing NMEA2000 network via an optional interface cable. Contact your dealer for more information.

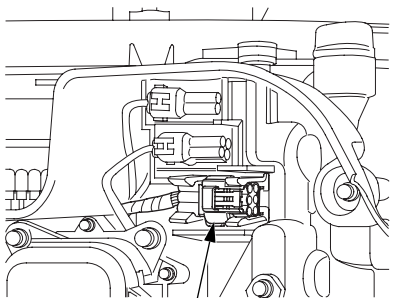

NMEA INTERFACE COUPLER

Operating Hour Notification System

This outboard motor engine counts the number of operating hours since the last periodic maintenance. When the next periodic maintenance is due, the engine notifies the NMEA2000 network, and a maintenance indication is displayed on an NMEA2000-compatible device.

After periodic maintenance is performed, reset the hour counter by:

1. Stopping the engine.
2. Setting the gearshift at F or R.
3. Turning the ignition switch ON.
   The buzzer will sound once.
4. Pressing the emergency stop switch 5 times within 20 seconds.
   The buzzer will sound once when the hour counter is reset.

Periodic maintenance is required when either the operating hours or the time since last maintenance reaches the prescribed limit. Therefore, periodic maintenance may be required based on the number of months since the last maintenance before the alert based on engine operating hours displays (see *MAINTENANCE SCHEDULE* on page 64).
Reset the hour counter whenever maintenance is performed, whether based on the time interval or the number of operating hours.

<Operating hour notification timing>

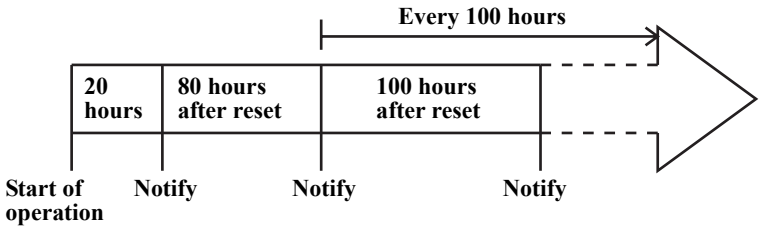

<Display>

Steps	1	2	3	4
Outboard motor	—	Ignition switch ON	Start engine	Gear at F or R
Display	Switch ON	—	—	—
Maintenance indication on display	Not shown Maintenance indication	Shown Maintenance indication	Shown Maintenance indication	Not shown Maintenance indication

NMEA2000-compatible display:

- Follow instructions for the display.
- If the display allows selection of notification to be preset, select ‘‘Notify’’ (or equivalent).
- Turn on the power supply to the display before turning on the ignition switch of the outboard motor.
- The indication may differ, depending on the type of display.

When “Periodic Maintenance” is indicated:

1. Have the periodic maintenance performed without delay after returning to port.
2. Reset the hour counter.
   If not reset, the maintenance indication will remain in the display, and the hour count until the next maintenance will be in error.

When the periodic maintenance is conducted before “Periodic Maintenance” is indicated, reset the hour counter.
If not reset, the hour count until the next maintenance will be in error.

INDICATORS

The indicator lights come on and the buzzer sounds when you turn the ignition switch ON, allowing you to see that they are working. If an indicator does not light during this test, it cannot alert you if that system develops a problem. Have your Honda Marine dealer check for burned-out bulbs or other problems. Under normal conditions, the following occur when the ignition switch is turned ON:

1. The ACG, Malfunction, Oil Pressure, and Overheat indicators light.
2. The buzzer will beep twice.
3. The Malfunction, Oil Pressure, and Overheat indicators will go out after the second beep.
4. The ACG indicator will go out after the engine starts.
5. The Oil Pressure indicator will light again after the engine starts and will stay lit to indicate the oil pressure is normal.

Alternator (ACG) Indicator

(side-mount type)

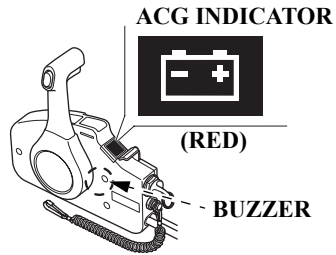

(panel-mount/top-mount types)

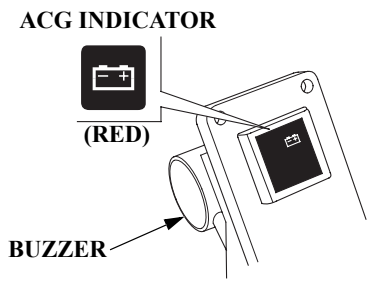

The ACG indicator turns on and the buzzer sounds in one-second intervals when the charging system is faulty.

Malfunction Indicator

(side-mount type)

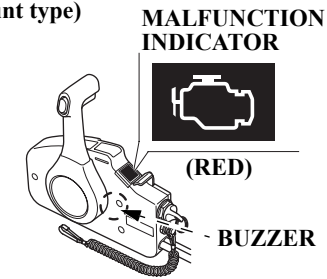

(panel-mount/top-mount types)

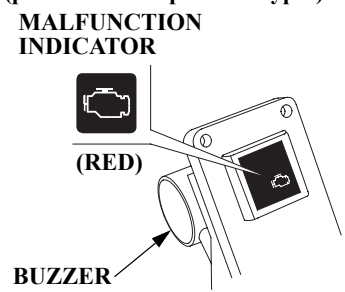

When the engine control system detects an engine control system malfunction, the malfunction indicator turns on and the buzzer sounds at one-second intervals.

Oil Pressure Indicator

(side-mount type)

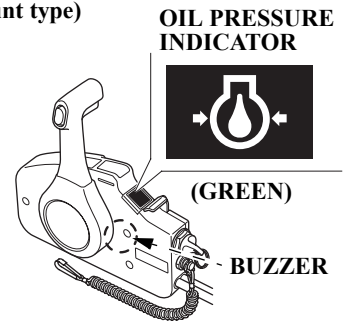

(panel-mount/top-mount types)

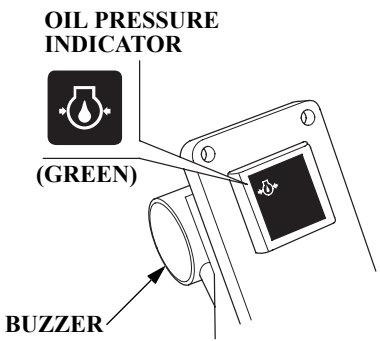

When the oil pressure indicator is lit, oil pressure is OK.

If oil pressure becomes low, the indicator will go off, and the engine protection system will limit engine speed. Refer to *TAKING CARE OF UNEXPECTED PROBLEMS*, on p. 102.

All models are equipped with a buzzer that sounds continuously when the oil pressure indicator goes off.

Low oil pressure indicates that the engine oil level is low or that there is a problem with the engine lubrication system.

Overheat Indicator

(side-mount type)

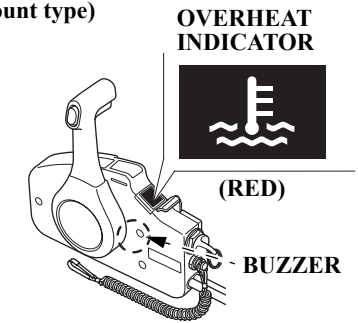

(panel-mount/top-mount types)

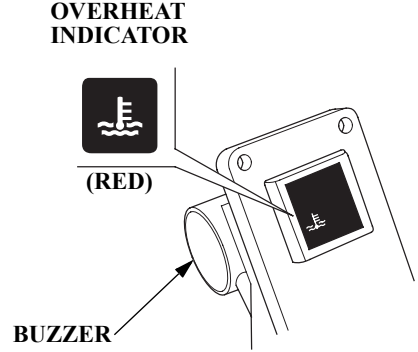

When the alert triggers, the overheat indicator comes on and the buzzer sounds a steady tone as the engine speed is reduced to 1,800 rpm. If the condition persists for another 20 seconds, the engine shuts off. Refer to *TAKING CARE OF UNEXPECTED PROBLEMS*, on p. 103.

All models are equipped with a buzzer that sounds continuously when the red overheat indicator light comes on.

Engine overheating may be the result of clogged water intakes.

Cooling System Indicator

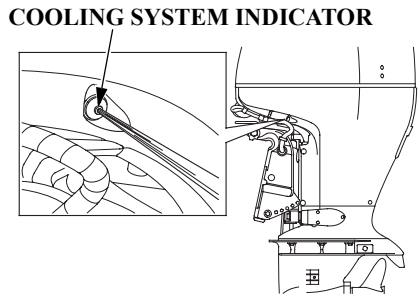

Water should flow from the cooling system indicator while the engine is running. This shows that water is circulating through the cooling system.

If water stops flowing while the engine is running, it indicates a cooling system problem, such as clogged water intakes, which will cause engine overheating.

The cooling system indicator discharge port can also become plugged.

OTHER FEATURES

Water Separator Buzzer

The water separator buzzer sounds a rapid, repeating signal when water has accumulated in the water separator.

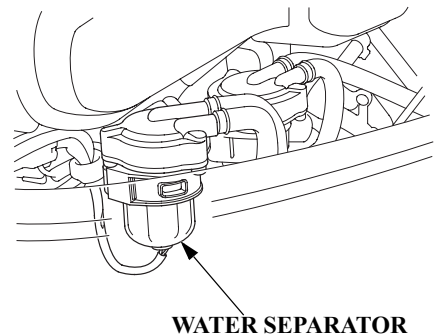

Rev Limiter

The engine is equipped with a rev limiter to prevent the possibility of mechanical damage from excessive engine speed.

The rev limiter may be activated during operation, limiting engine speed, if the outboard motor is trimmed or tilted up excessively, or when propeller ventilation occurs during a sharp turn.

If the rev limiter is activated, check the trim angle of the outboard motor.

Check to see if the correct propeller is installed.

Anodes

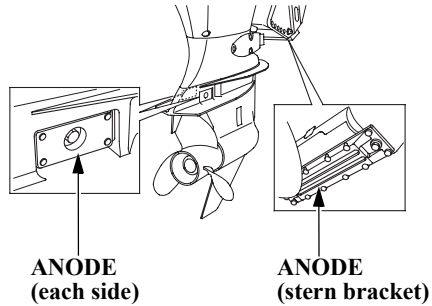

The anodes are made of a sacrificial material that helps to protect the outboard motor from corrosion.

There are two anodes on the gear case, one on the stern bracket and two small anodes in the water passages of the engine block.

Fuel Priming Bulb

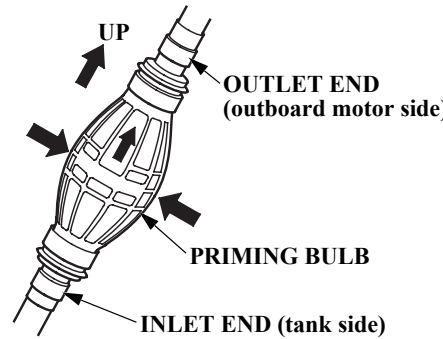

A priming bulb is built into the fuel hose that connects the fuel tank to the outboard motor.

Before starting the engine, hold the priming bulb up in the direction of the arrow; then squeeze the priming bulb until it feels firm. This will ensure that fuel is supplied to the engine (p. 42).

ARE YOU READY TO GET UNDERWAY?

Your safety is your responsibility. A little time spent in preparation will significantly reduce your risk of injury.

Knowledge

Read and understand this manual. Know what the controls do and how to operate them.

Familiarize yourself with the outboard motor and its operation before you get underway. Know what to do in case of an emergency.

Familiarize yourself with all laws and regulations relating to boating and the use of outboard motors.

Safety

Always wear a PFD (Personal Flotation Device) while on the boat.

Attach the emergency stop switch lanyard securely to the operator or to the operator's PFD.

IS YOUR OUTBOARD MOTOR READY TO GO?

For your safety, and to maximize the service life of your equipment, it is very important to take a few moments before you operate the outboard motor to check its condition. Be sure to take care of any problem you find, or have your authorized Honda Marine dealer correct it, before you operate the outboard motor.

⚠ WARNING

Improperly maintaining this outboard motor or failing to correct a problem before operation can cause a malfunction in which you could be seriously hurt or killed.

Always perform a pre-operation inspection before each operation, and correct any problem.

Before beginning your pre-operation checks, be sure the ignition switch is in the OFF position.

Safety Inspection

- Before each use, look around and underneath the engine for signs of oil or gasoline leaks.
- Check that the fuel hose is undamaged and properly connected.
- Wipe up any spills before starting the engine.
- Check the stern bracket to be sure the outboard motor is securely installed.
- Check that all controls are operating properly.
- Replace any damaged parts.
- Check that all fasteners are in place and securely tightened.
- Check the emergency stop switch for proper operation. Start the engine (p. 43, 46 or 48). Make sure the engine stops by pulling the emergency stop switch clip from the emergency stop switch.

Maintenance Inspection

- Check the engine oil level (p. 68). Running the engine with a low oil level can cause engine damage. Overfilling the engine can cause the engine to smoke or have oil leaks which can cause engine damage.
- Check to be sure the propeller is undamaged and the castle nut is secured with the cotter pin (p. 86).
- Check that the anodes are securely attached to the stern bracket and the gear case (p. 85) and are not excessively worn. The anodes help protect the outboard motor from corrosion.
- Make sure the tool kit is onboard (p. 63). Replace any missing items.
- Check the fuel level in the fuel tank (p.78).
- Check that the battery fluid is between the upper and lower levels, and the battery leads are connected securely.
- Check the water separator for water contamination (p. 83).

SAFE OPERATING PRECAUTIONS

To safely realize the full potential of this outboard motor, you need a complete understanding of its operation and a certain amount of practice with its controls.

Before operating the outboard motor for the first time, please review the *IMPORTANT SAFETY INFORMATION* on page 7 and the chapter titled *BEFORE OPERATION*.

For your safety, do not start or run the engine in a confined or partly enclosed area. Your engine's exhaust contains poisonous carbon monoxide, a colorless, odorless gas that can collect rapidly. Breathing carbon monoxide can cause loss of consciousness and may lead to death.

BREAK-IN PROCEDURE

Break-in period: 10 hours

Proper break-in operation allows the moving parts to wear in smoothly for best performance and long service life. Avoid continuous operation at a steady speed.

First 15 minutes:

Run the engine at trolling speed. Use the minimum throttle opening necessary to operate the boat at a safe trolling speed.

Next 45 minutes:

Run the engine up to a maximum of 2,000 to 3,000 rpm, which is about 10% to 30% of maximum throttle opening. Operating at maximum 2,000 ~ 3,000 rpm should be limited to 50% of the 45 minutes.

Next 60 minutes:

Run the engine up to a maximum of 4,000 to 5,000 rpm, which is about 50% to 80% of maximum throttle opening. Operating at maximum 4,000 ~ 5,000 rpm should be limited to 50% of the 60 minutes.

30-second full-throttle bursts are OK, but do not operate the engine continuously at full throttle.

For boats that plane easily, bring the boat up on plane, and then reduce the throttle opening to the recommended rpm range.

Next 8 hours:

Do not run the engine at full throttle for more than 5 minutes at a time.

FUEL PRIMING

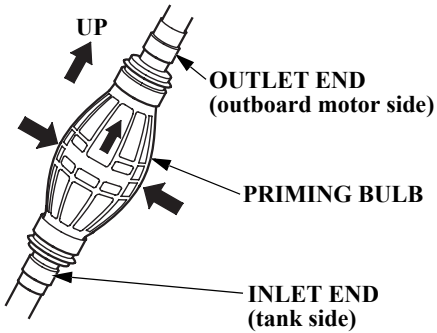

Hold the priming bulb up in the direction of the arrow; then squeeze the priming bulb several times until it feels firm, indicating that fuel has reached the engine.

Check to be sure there are no fuel leaks before starting the engine.

Do not touch the priming bulb with the engine running or when tilting up the outboard motor. The vapor separator could overflow.

⚠ WARNING

Gasoline is highly flammable and explosive, and you can be burned or seriously injured when handling fuel.

- Stop the engine and let it cool before handling fuel.
- Keep heat, sparks, and flame away.
- Handle fuel only outdoors.
- Wipe up spills immediately.

INFREQUENT OR OCCASIONAL USE

If your outboard motor will be used on an infrequent or intermittent basis, please refer to the fuel section of the *STORAGE* chapter (p. 89) for additional information regarding fuel deterioration.

STARTING THE ENGINE

Control
Side-Mount Type ..... p. 43
Panel-Mount Type ..... p. 46
Top-Mount Type ..... p. 48

Side-Mount Type

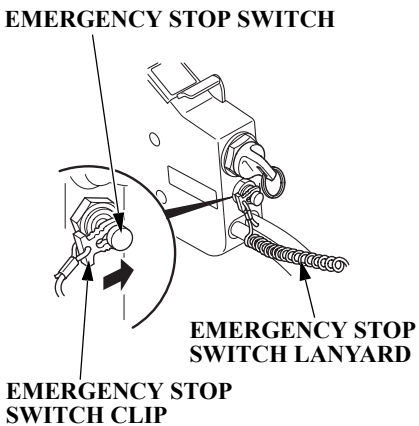

1. Put the emergency stop switch clip in the emergency stop switch, and attach the emergency stop switch lanyard securely to the operator or to the operator's PFD (Personal Flotation Device).

   The engine will not start or run, unless the emergency stop switch clip is in the emergency stop switch.

   The emergency stop switch clip and emergency stop switch lanyard system is a safety device that will stop the engine if you fall away from the controls while operating the boat.

   Always attach the emergency stop switch lanyard securely to the operator or to the operator's PFD before starting the engine.

   Before leaving the dock, check the operation of the emergency stop switch.

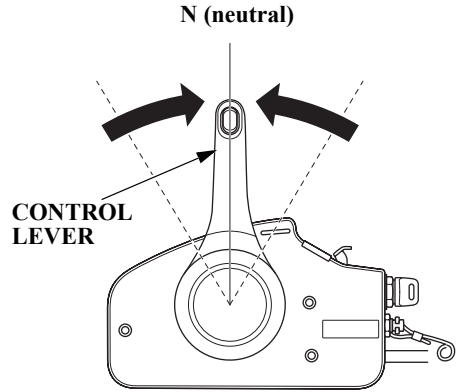

2. Set the control lever in the N (neutral) position.

   The engine will not start if the F (forward) or R (reverse) gears are engaged.

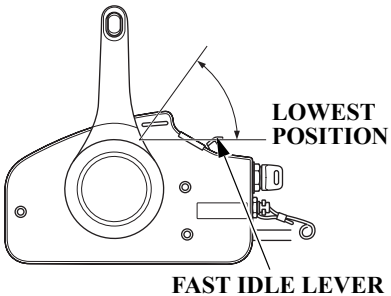

3. Leave the fast idle lever in the OFF (fully lowered) position.

   The fast idle lever cannot be raised unless the control lever is in the N (neutral) position.

   The control lever cannot be moved away from the N (neutral) position unless the fast idle lever is lowered.

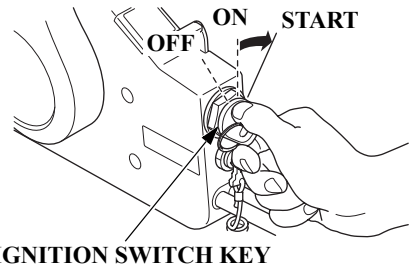

4. Turn the ignition switch key to the ON position; the buzzer will sound twice.

5. Turn the ignition switch key to the START position and hold it there until the engine starts.
   When the engine starts, release the key, allowing it to return to the ON position.

   If the engine fails to start within 5 seconds, release the key and wait at least 10 seconds before operating the starter again.

NOTICE

- *Using the electric starter for more than 5 seconds at a time will overheat the starter motor and can damage it.*
- *Turning the ignition switch key to the START position while the engine is running can damage the starter motor and flywheel.*

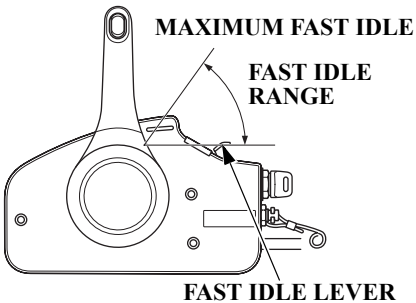

6. Before getting underway, allow the engine to warm-up sufficiently to ensure good performance.

   Above 41°F (5°C), warm-up the engine for at least 3 minutes.

   Below 41°F (5°C), warm-up the engine for at least 5 minutes at 2,000 rpm. Raise the fast idle lever to achieve approximately 2,000 rpm.

NOTICE

- *If the engine is not properly warmed up before raising the engine speed, the buzzer and overheat indicator may activate and the engine speed will be automatically reduced.*
- *The cooling system may freeze in areas where the temperature reaches 32°F (0°C) or below. Cruising at high speed without warming the engine up may cause engine damage.*

   During the warm-up period, check the oil pressure indicator (p. 36), overheat indicator (p. 36), and cooling system indicator (p. 37).

   If the indicators show any abnormal condition, immediately stop the engine and determine the cause of the problem. Refer to *TAKING CARE OF UNEXPECTED PROBLEMS* on p. 102 – 104.

7. If the fast idle lever was used to warm-up the engine, gradually lower the lever as the engine warms up.

   When the fast idle lever is fully lowered, the control lever can be moved away from the N (neutral) position.

Panel-Mount Type

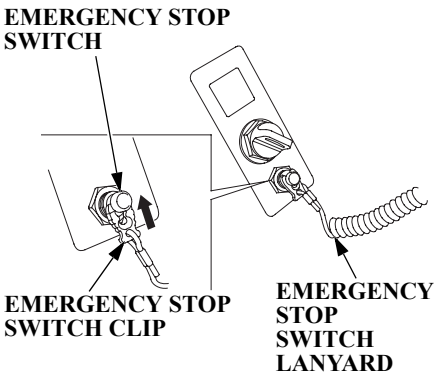

1. Put the emergency stop switch clip in the emergency stop switch, and attach the emergency stop switch lanyard securely to the operator or to the operator's PFD (Personal Flotation Device).

The engine will not start or run, unless the emergency stop switch clip is in the emergency stop switch.

The emergency stop switch clip and emergency stop switch lanyard system is a safety device that will stop the engine if you fall away from the controls while operating the boat.

Always attach the emergency stop switch lanyard securely to the operator or to the operator's PFD before starting the engine.

Before leaving the dock, check the operation of the emergency stop switch.

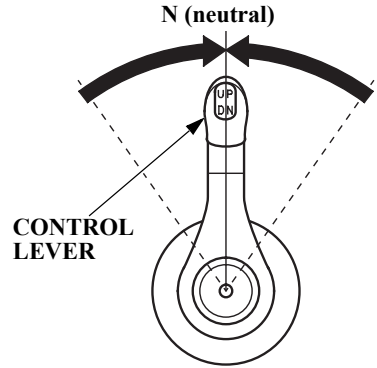

2. Set the control lever in the N (neutral) position.

   The engine will not start if the F (forward) or R (reverse) gears are engaged.

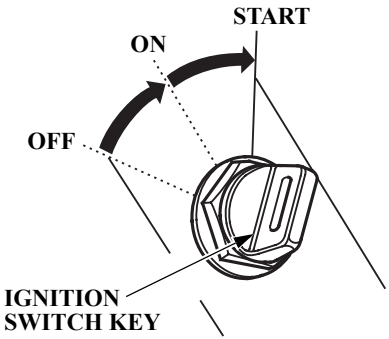

3. Turn the ignition switch key to the ON position; the buzzer will sound twice.

4. Turn the ignition switch key to the START position and hold it there until the engine starts.
   When the engine starts, release the key, allowing it to return to the ON position.
   If the engine fails to start within 5 seconds, release the key and wait at least 10 seconds before operating the starter again.

NOTICE

- *Using the electric starter for more than 5 seconds at a time will overheat the starter motor and can damage it.*
- *Turning the ignition switch key to the START position while the engine is running can damage the starter motor and flywheel.*

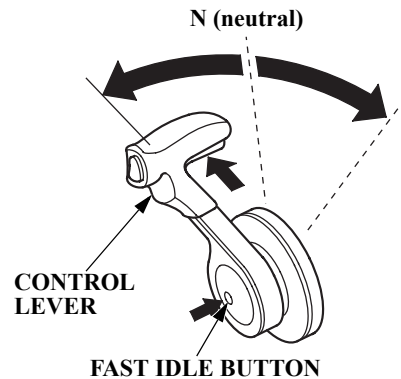

5. Before getting underway, allow the engine to warm-up sufficiently to ensure good performance.

   Above 41°F (5°C), warm-up the engine for at least 3 minutes.

   Below 41°F (5°C), warm-up the engine for at least 5 minutes at 2,000 rpm. Push the fast idle button, and then move the control lever forward or reverse to open the throttle and achieve approximately 2,000 rpm.

NOTICE

- *If the engine is not properly warmed up before raising the engine speed, the buzzer and overheat indicator may activate and the engine speed will be automatically reduced.*
- *The cooling system may freeze in areas where the temperature reaches 32°F (0°C) or below. Cruising at high speed without warming the engine up may cause engine damage.*

During the warm-up period, check the oil pressure indicator (p. 36), overheat indicator (p. 36), and cooling system indicator (p. 37).

If the indicators show any abnormal condition, immediately stop the engine and determine the cause of the problem. Refer to *TAKING CARE OF UNEXPECTED PROBLEMS* on p. 102 – 104.

6. If the fast idle control was used to warm-up the engine, gradually return the control lever to the N (neutral) position as the engine warms up.

Top-Mount Type

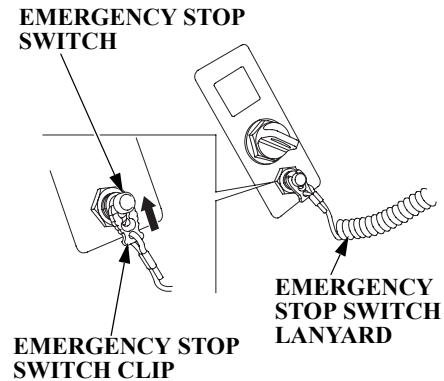

1. Put the emergency stop switch clip in the emergency stop switch, and attach the emergency stop switch lanyard securely to the operator or to the operator's PFD (Personal Flotation Device).

The engine will not start or run, unless the emergency stop switch clip is in the emergency stop switch.

The emergency stop switch clip and emergency stop switch lanyard system is a safety device that will stop the engine if you fall away from the controls while operating the boat.

Always attach the emergency stop switch lanyard securely to the operator or to the operator's PFD before starting the engine.

Before leaving the dock, check the operation of the emergency stop switch.

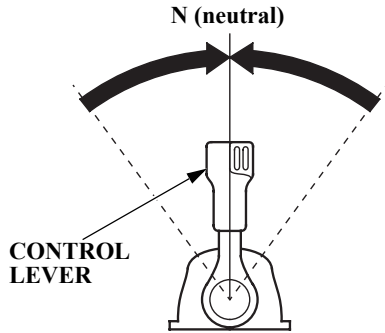

2. Set the control lever in the N (neutral) position.

   The engine will not start if the F (forward) or R (reverse) gears are engaged.

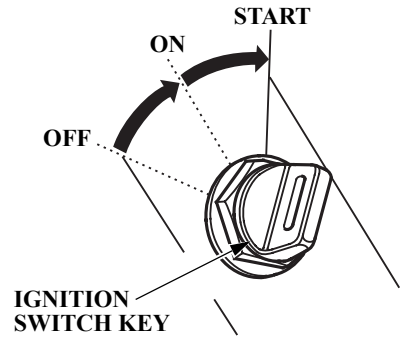

3. Turn the ignition switch key to the ON position; the buzzer will sound twice.

4. Turn the ignition switch key to the START position and hold it there until the engine starts.
   When the engine starts, release the key, allowing it to return to the ON position.

If the engine fails to start within 5 seconds, release the key and wait at least 10 seconds before operating the starter again.

NOTICE

- *Using the electric starter for more than 5 seconds at a time will overheat the starter motor and can damage it.*
- *Turning the ignition switch key to the START position while the engine is running can damage the starter motor and flywheel.*

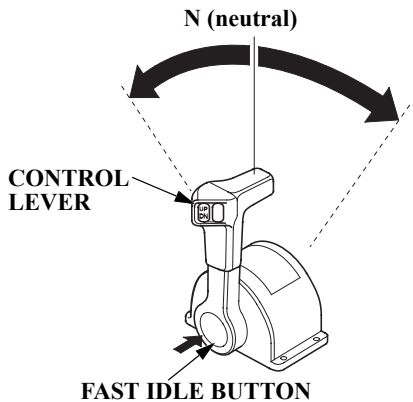

5. Before getting underway, allow the engine to warm-up sufficiently to ensure good performance.

   Above 41°F (5°C), warm-up the engine for at least 3 minutes.

   Below 41°F (5°C), warm-up the engine for at least 5 minutes at 2,000 rpm. Push the fast idle button, and then move the control lever forward or reverse to open the throttle and achieve approximately 2,000 rpm.

NOTICE

- *If the engine is not properly warmed up before raising the engine speed, the buzzer and overheat indicator may activate and the engine speed will be automatically reduced.*
- *The cooling system may freeze in areas where the temperature reaches 32°F (0°C) or below. Cruising at high speed without warming the engine up may cause engine damage.*

During the warm-up period, check the oil pressure indicator (p. 36), overheat indicator (p. 36), and cooling system indicator (p. 37).

If the indicators show any abnormal condition, immediately stop the engine and determine the cause of the problem. Refer to *TAKING CARE OF UNEXPECTED PROBLEMS* on p. 102 – 104.

6. If the fast idle control was used to warm-up the engine, gradually return the control lever to the N (neutral) position as the engine warms up.

STOPPING THE ENGINE

Emergency Engine Stopping

Side-Mount Type

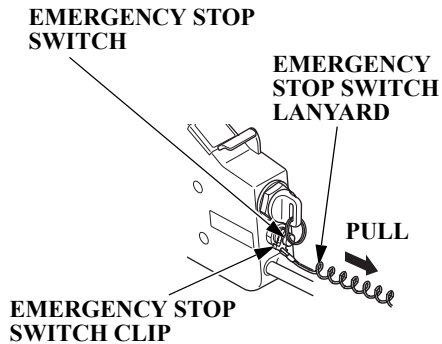

Panel-Mount/Top-Mount Types

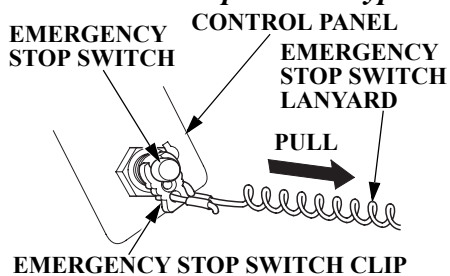

To stop the engine in an emergency, pull the emergency stop switch clip out of the emergency stop switch by pulling the emergency stop switch lanyard.

We suggest that you stop the engine this way occasionally to verify that the emergency stop switch is operating properly.

Before leaving the dock, check the operation of the emergency stop switch.

Turn the ignition switch key to the OFF position after verifying the emergency stop switch operation.

Normal Engine Stopping

Side-Mount Type

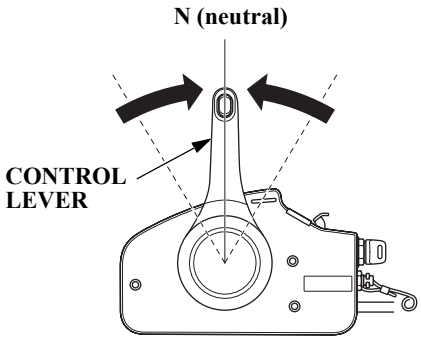

Panel-Mount Type

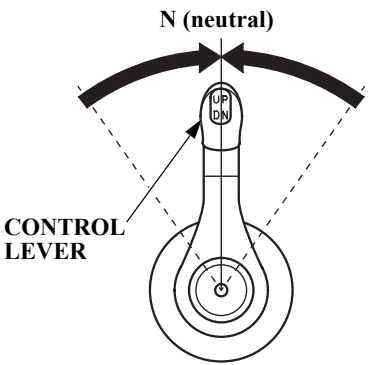

Top-Mount Type

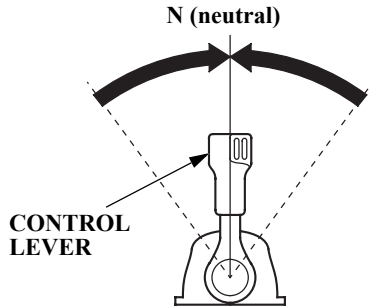

1. Move the control lever(s) to the N (neutral) position.

After cruising at full throttle, cool down the engine by idling for a few minutes before stopping the engine.

Side-Mount Type

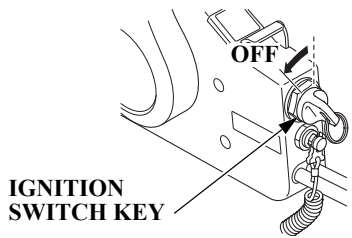

Panel-Mount/Top-Mount Types

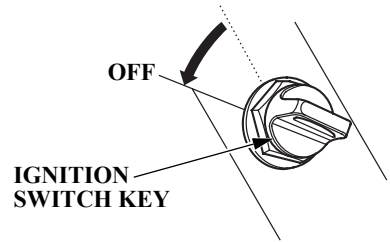

2. Turn the ignition switch key to the OFF position to stop the engine. In the event that the engine does not stop when the ignition switch key is turned to OFF, press the emergency stop switch until the engine stops.
3. When the boat is not in use, remove and store the ignition switch key and the emergency stop switch clip and lanyard.

GEARSHIFT AND THROTTLE OPERATION

Side-Mount Type

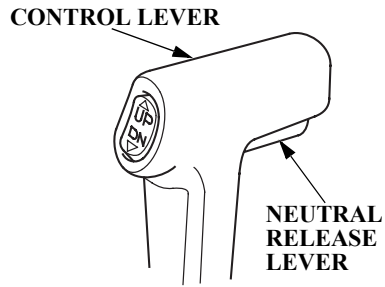

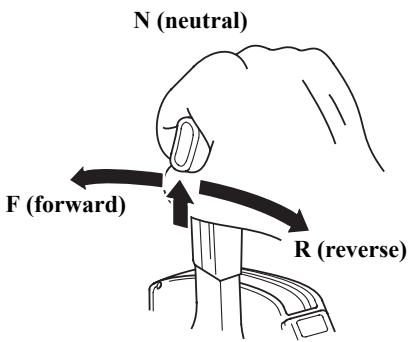

Panel-Mount Type

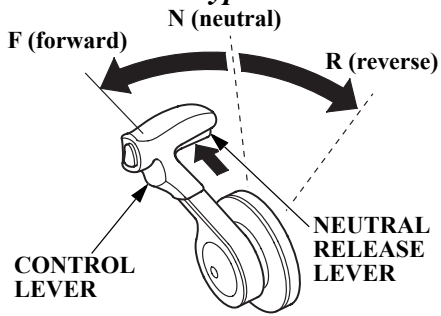

Top-Mount Type

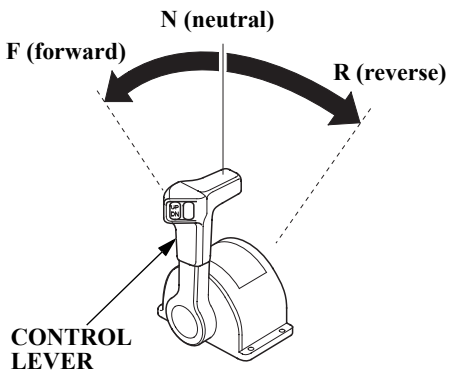

To shift gears, move the control lever to select the F (forward), N (neutral), or R (reverse) gear.

The control lever cannot be moved from the N (neutral) position unless the neutral release lever is squeezed (side-mount/panel-mount types).

Moving the control lever beyond the gear selection range increases engine speed.

Side-Mount Type

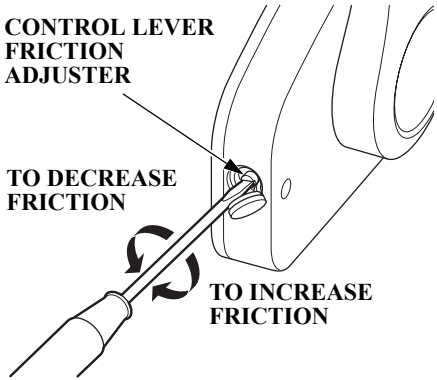

Panel-Mount Type

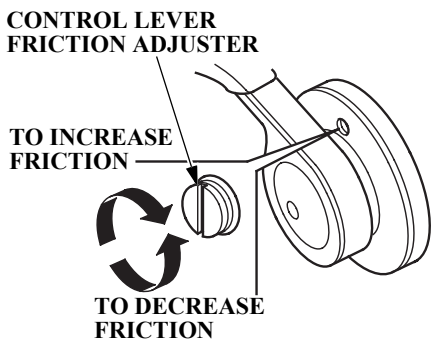

Top-Mount Type

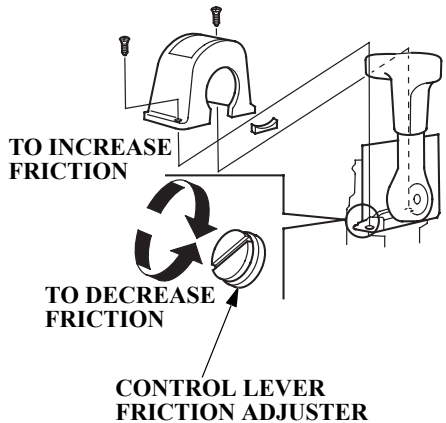

Adjust the control lever friction adjuster so the control lever will hold a constant throttle setting while cruising.

STEERING

Steer the boat in the same manner as an automobile.

CRUISING

Engine Speed

For best fuel economy, limit the throttle opening to 80%. Use the throttle friction control (p. 54) to help you hold a steady speed.

For rough water conditions or large waves, slow down to prevent the propeller from rising out of the water.

The engine is equipped with a rev limiter to prevent the possibility of mechanical damage from excessive engine speed.

If, for example, the outboard motor is tilted excessively or propeller ventilation occurs during a sharp turn, the engine may overrev, activating the rev limiter.
If engine speed becomes unstable at high speed due to activation of the rev limiter, reduce speed and check the trim angle of the outboard motor.

Trim

Use the power trim/tilt switch to trim the outboard motor for the best performance and stability.

You can use the power trim/tilt switch at any time, whether the boat is underway or stopped.

Press the UP or DN (down) side of the switch to adjust the angle of the outboard motor.

Refer to the trim meter (p. 31) for an indication of whether the outboard motor is trimmed high or low.

It is necessary to trim the angle of the outboard motor to compensate for changes in boat load, weight distribution, water conditions, or propeller selection.

Under normal conditions, the boat will perform best when the antiventilation plate is level with the water surface.

When cruising into a high wind, trim the outboard motor down slightly to level the boat and improve stability. With a tail wind, trim the outboard motor up slightly.

NOTICE

Excessive trim/tilt angle during operation can cause propeller ventilation, overheating, and water pump damage.

Side-Mount Type

POWER TRIM/TILT SWITCH

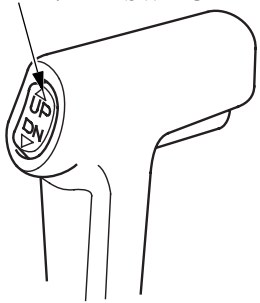

Panel-Mount Type

POWER TRIM/TILT SWITCH

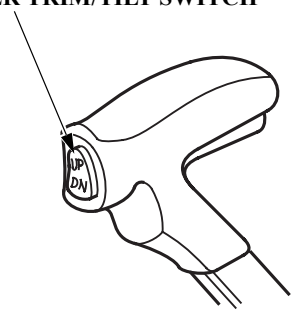

Top-Mount Type

(single type)

POWER TRIM/TILT SWITCH

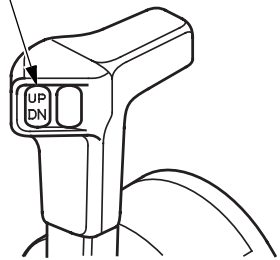

(dual type)

POWER TRIM/TILT SWITCH

(LEFT) **(RIGHT)**

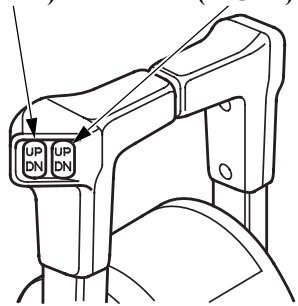

OUTBOARD MOTOR TRIMMED TOO LOW

OUTBOARD MOTOR TRIMMED TOO HIGH

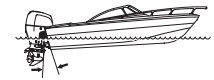

OUTBOARD MOTOR TRIMMED CORRECTLY

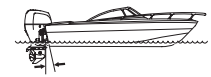

BOW TOO LOW DUE TO
1. LOAD IN THE FRONT
2. OUTBOARD MOTOR TRIMMED TOO LOW

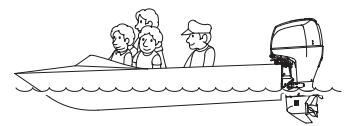

BOW TOO HIGH DUE TO
1. LOAD IN THE REAR
2. OUTBOARD MOTOR TRIMMED TOO HIGH

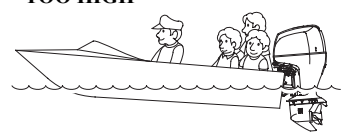

Trolling Speed Control

Remote Control Box (Side-mount type)

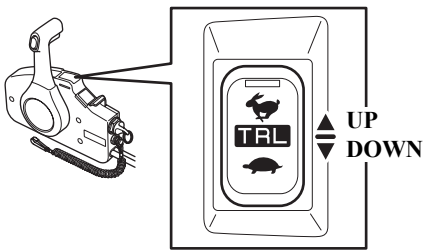

TRL (Trolling) CONTROL SWITCH

Trolling Control Switch Panel (optional equipment)

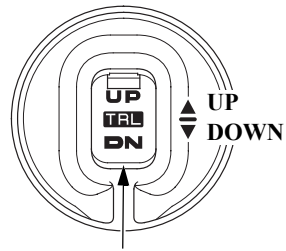

TRL (Trolling) CONTROL SWITCH

DN: Reduce engine speed
UP: Increase engine speed

The engine must be fully warmed up before you can activate the Trolling Speed Control.
Place the outboard motor in-gear with the throttle control in the fully closed (idle) position. Press and hold the UP or DN side of the TRL control switch to activate the Trolling Speed Control. The buzzer will make one long sound indicating activation.
The initial trolling speed is set at 650 rpm.

The engine speed can be adjusted in 50 rpm increments by pressing the UP or DN side of the TRL control switch. A short sound of the buzzer occurs each time the engine speed is adjusted.
In Trolling Speed Control mode, the engine speed can be adjusted between 650 and 900 rpm.
Continuing to press the switch when at either of these limits will result in two short sounds from the buzzer.
The throttle control will operate when in the Trolling Speed Control mode, but once the speed reaches 3,000 rpm, the Trolling Speed Control is deactivated. If 3,000 rpm is not reached and the throttle is closed, the engine speed will decrease to the Trolling Speed Control setting.

TRIM TAB

If steering effort is not equal in both directions, adjust the trim tab to compensate for "torque steer," which is the reaction of the outboard motor to propeller rotation.

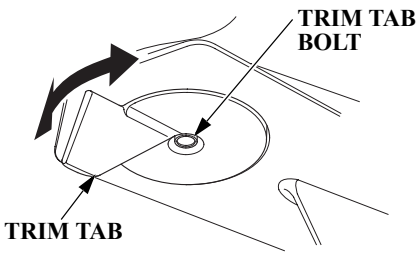

Adjust the trim tab with the engine stopped. Loosen the bolt above the trim tab, turn the trim tab, and then tighten the bolt securely.

When the trim tab is correctly adjusted, steering effort will be equal in both directions.

Refer to *TRIM TAB ADJUSTMENT* on p. 66.

SHALLOW WATER OPERATION

When operating in shallow water, use the power trim/tilt switch (p. 56) to tilt the outboard motor so that the propeller and gear case won't hit the bottom.

Proceed at low speed, and monitor water flow from the cooling system indicator (p. 37) to be sure the outboard motor is not tilted so high that the water intakes are out of the water.

NOTICE

An excessive trim/tilt angle during operation can cause propeller ventilation, overheating, and water pump damage. This type of damage is not covered by the Distributor's Limited Warranty *(p. 119).*

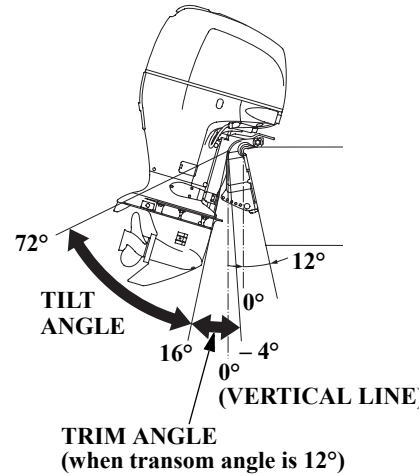

MOORING, BEACHING, LAUNCHING

Before tilting up, leave the outboard motor in the running position for one minute after stopping the engine to drain the water from inside the engine.

Stop the engine and disconnect the fuel hose from the outboard motor before tilting the outboard motor.

To raise the outboard motor out of the water while the engine is stopped and the boat is moored, or for maximum clearance when beaching or launching, use the power tilt switch on the engine pan to tilt the outboard motor up as far as it will go. Move the tilt lock lever to the LOCK position, and then gently lower the outboard motor until the lever contacts the stern bracket. Use the power tilt switch to fully shorten the trim rods.

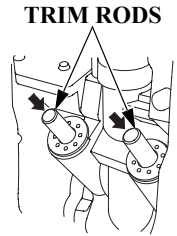

To lower the outboard motor, tilt up using the power tilt switch, then move the tilt lock lever to the FREE position, and then lower the outboard motor to the desired position.

NOTICE

Do not attempt to use the power tilt switch to tilt the outboard motor down while the tilt lock lever is in the LOCK position. Damage to the power tilt system may occur.

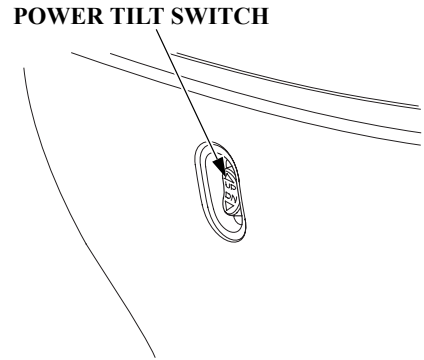

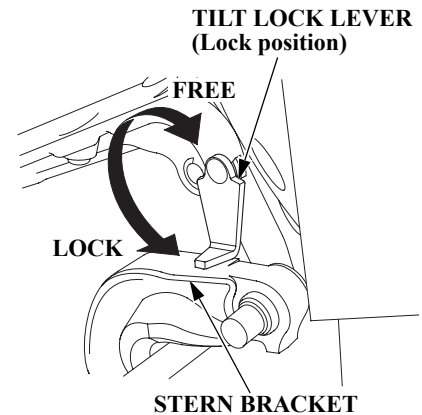

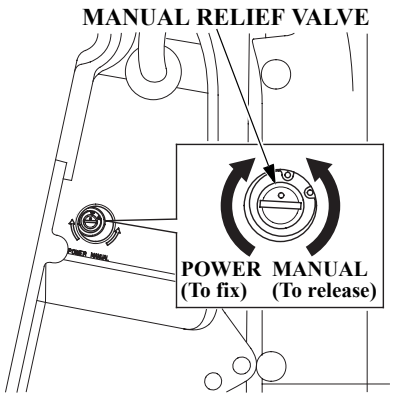

The outboard motor can also be tilted manually after opening the manual relief valve. This feature enables the outboard motor to be tilted up or down when no battery is connected.

For manual tilting, use a screwdriver to turn the valve counterclockwise 1 or 2 turns. Close the valve firmly after positioning the engine.

Be sure the valve is closed before operating the outboard motor. If the valve is not closed, the outboard motor will tilt up when operated in reverse.

Check that nobody is under the outboard motor before opening the manual relief valve. If the manual relief valve is loosened (turned counterclockwise) when the outboard motor is tilted up, the outboard motor will suddenly tilt down.

MULTIPLE OUTBOARD MOTORS

On boats equipped with more than one outboard motor, all motors normally operate at the same time.

If one or more motor(s) is stopped while the other(s) is running, put the stopped motor in ‘‘N’’ (neutral) and tilt it up so its propeller is above the water’s surface.

If the propeller of the stopped motor is left in the water, it may turn as the boat moves through the water, causing a reverse flow of water from the exhaust side. This reverse flow will happen if the stopped engine’s propeller is in the water, its gearshift is in ‘‘R’’ (reverse), and the boat is moving forward. Reverse flow can cause an engine malfunction.

THE IMPORTANCE OF MAINTENANCE

Proper maintenance is essential for safe, economical, and trouble-free operation. It will also help reduce air pollution.

⚠WARNING

Improperly maintaining this outboard motor or failure to correct a problem before operation can cause a malfunction in which you could be seriously hurt or killed.

Always follow the inspection and maintenance recommendations and schedules in this Owner's Manual.

To help you properly care for your outboard motor, the following pages include a maintenance schedule, routine inspection procedures, and simple maintenance procedures using basic hand tools. Other service tasks that are more difficult or require special tools are best handled by professionals and are normally performed by a Honda technician or other qualified mechanic.

The maintenance schedule applies to normal operating conditions. If you operate your outboard motor under unusual conditions, consult an authorized Honda Marine dealer for recommendations applicable to your individual needs and use.

Remember that your authorized Honda Marine dealer knows your outboard motor best and is fully equipped to maintain and repair it.

To ensure the best quality and reliability, use only new, Honda Genuine parts or their equivalents for repair and replacement.

Maintenance, replacement, or repair of the emission control devices and systems may be performed by any marine engine repair establishment or individual, using parts that are "certified" to EPA standards.

MAINTENANCE SAFETY

Some of the most important safety precautions follow. However, we cannot warn you of every conceivable hazard that can arise in performing maintenance. Only you can decide whether or not you should perform a given task.

⚠WARNING

Failure to properly follow maintenance instructions and precautions can cause you to be seriously hurt or killed.

Always follow the procedures and precautions in the Owner's Manual.

Safety Precautions

- Make sure the engine is off before you begin any maintenance or repairs. This will eliminate several potential hazards:

  — **Carbon monoxide poisoning from engine exhaust.**
  Do not start or run the engine in a confined or partly enclosed area.

  — **Burns from hot parts.**
  Let the engine and exhaust system cool before touching.

  — **Injury from moving parts.**
  Do not run the engine unless instructed to do so.

- Read the instructions before you begin, and make sure you have the tools and skills required.
- To reduce the possibility of fire or explosion, be careful when working around gasoline. Use only a nonflammable solvent, not gasoline, to clean parts. Keep cigarettes, sparks, and flames away from all fuel-related parts.
- Wear gloves when handling the propeller to protect your hands from sharp edges.

TOOL KIT and OWNER'S MANUAL

(Tool kit does not come with Counter Rotation Types)

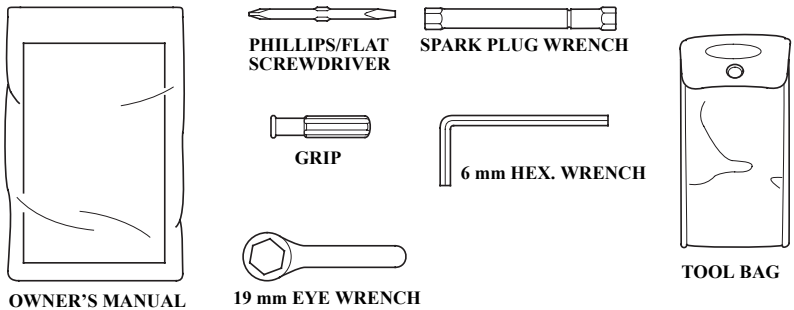

The tool kit can be used for simple maintenance procedures and emergency repairs. Keep these items on the boat so that they will always be available if you need them.

If your tool kit needs replacement, it is not available as a kit and each item must be ordered individually.

SPARE EMERGENCY STOP SWITCH CLIP (optional equipment)

Always carry a spare emergency stop switch clip onboard. The spare clip may either be stored in the tool bag or in an easily accessible location on the boat.

MAINTENANCE SCHEDULE

Follow the MAINTENANCE SCHEDULE table and service your outboard motor accordingly. Please note, a claim for warranty coverage will not be denied simply because the maintenance schedule for your outboard motor was not followed. However, any part(s) that fails specifically due to lack of maintenance, or improperly performed maintenance, would not be covered under the *Distributor's Limited Warranty.*

REGULAR SERVICE PERIOD (3) Perform at every indicated month or operating hour interval, whichever comes first. / ITEM		Each use	After use	First month or 20 hrs.	Every 6 months or 100 hrs.	Every year or 200 hrs.	Every 2 years or 400 hrs.	Refer to page
Engine oil	Check level	o						68
	Change			o	o			
Engine oil filter	Replace					o (2)		71
Gear case oil	Change			o (2)	o (2)			–
ACG belt	Check-adjust					o (2)		–
Throttle linkage	Check-adjust			o (2)	o (2)			–
Idle speed	Check-adjust			o (2)	o (2)			–
Valve clearance	Check-adjust					o (2)		–
Spark plug (Standard plug)	Check-adjust/Replace				o			75 – 77
Propeller and cotter pin	Check	o						86
Anode metal	Check Outside engine	o						85
Anode metal	Check Inside engine						o (2) (6)	–
Lubrication	Grease			o (1)	o (1)			73 – 74
Water separator	Check	o						83 – 84
Fuel filter (Low pressure side)	Check				o			80 – 82
	Replace						o	

(1) Lubricate more frequently when used in salt water.
(2) These items should be serviced by your servicing dealer, unless you have the proper tools and are mechanically proficient. Refer to the Honda Shop Manual for service procedures. See "Honda Publications" on page 116 for ordering information.
(3) For professional commercial use, log hours of operation to determine proper maintenance intervals.
(6) Replace the anodes when they have been reduced to about one third their original size, or if they are crumbling.

REGULAR SERVICE PERIOD (3) Perform at every indicated month or operating hour interval, whichever comes first. / ITEM		Each use	After use	First month or 20 hrs.	Every 6 months or 100 hrs.	Every year or 200 hrs.	Every 2 years or 400 hrs.	Refer to page
Fuel filter (High pressure side)	Replace						o (2)	–
Thermostat	Check					o (2)		–
Fuel line	Check	o (7)						40
	Replace	Every 2 years (If necessary) (2) (8)						–
Battery and cable connection	Check level-tightness	o						40
Bolts and nuts	Check-tightness			o (2)	o (2)			–
Crankcase breather tube	Check					o (2)		–
Cooling water passages	Clean		o (4)					–
Water pump	Check					o (2)		–
Emergency stop switch	Check	o						40
Engine oil leak	Check	o						–
Each operation part	Check	o						–
Engine condition (5)	Check	o						–
Power Trim/Tilt	Check				o (2)			–
Spark plug	Check					o		78
(Optional iridium plug)	Replace						o	78
Shift Cable	Check-adjust				o (2)			–

(2) These items should be serviced by your servicing dealer, unless you have the proper tools and are mechanically proficient. Refer to the Honda Shop Manual for service procedures. See “Honda Publications” on page 116 for ordering information.
(3) For professional commercial use, log hours of operation to determine proper maintenance intervals.
(4) When operating in salt water, turbid or muddy water, the engine should be flushed with clean water after each use.
(5) Upon starting, check for unusual engine sounds and cooling water flowing freely from the check hole.
(7) Check the fuel line for leaks, cracks or damage. If it is leaking, cracked or damaged, take it to your servicing dealer for replacement before using your outboard.
(8) Replace the fuel line if there are signs of leaks, cracks or damage.

TRIM TAB ADJUSTMENT

The trim tab compensates for ‘‘torque steer,’’ which is a reaction of the outboard motor to propeller rotation.

If uncompensated, torque steer would make the outboard motor tend to turn to one side.

When the trim tab is correctly adjusted, steering effort is equal in either direction.

If steering effort is unequal, loosen the trim tab bolt and adjust the angle of the trim tab. Retighten the trim tab bolt securely.

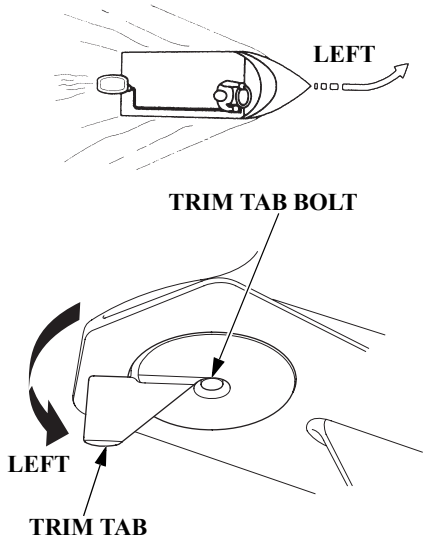

If less effort is required to make left turns, move the back of the trim tab left.

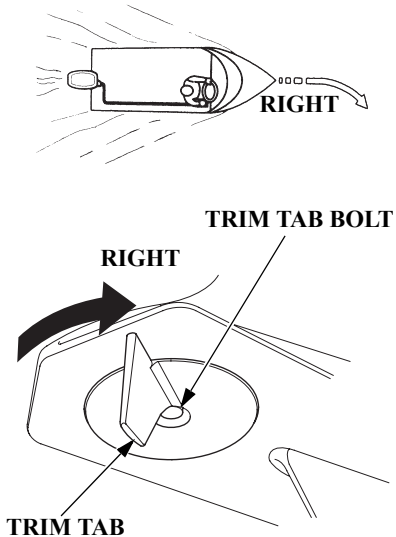

If less effort is required to make right turns, move the back of the trim tab right.

Adjust the trim tab in small increments, and retest steering effort with the boat evenly loaded and running at cruising speed.

MANUAL RELIEF VALVE

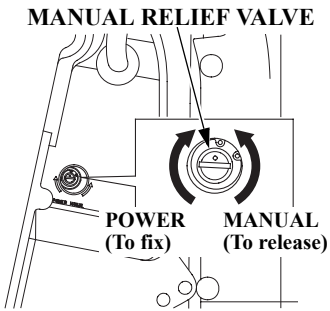

The outboard motor can be tilted manually after opening the manual relief valve. This feature enables the outboard motor to be tilted up or down when no battery is connected.

For manual tilting, use a screwdriver to turn the valve counterclockwise 1 or 2 turns. Close the valve firmly after positioning the outboard motor.

Be sure the valve is closed before operating the outboard motor. If the valve is not closed, the outboard motor will tilt up when operated in reverse.

Check that nobody is under the outboard motor before opening the manual relief valve. If the manual relief valve is loosened (turned counterclockwise) when the outboard motor is tilted up, the outboard motor will suddenly tilt down.

ENGINE COVER REMOVAL AND INSTALLATION

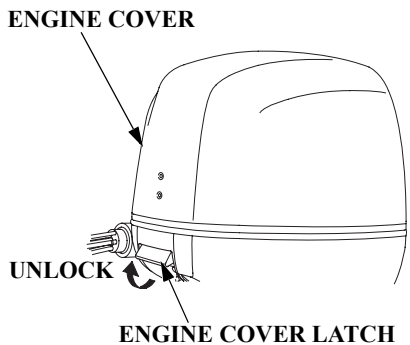

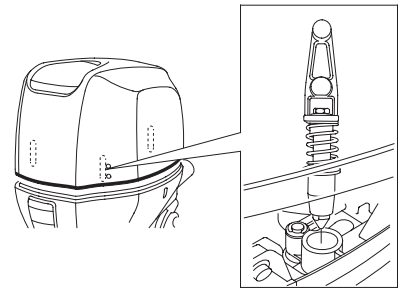

The engine cover latch fastens the engine cover to the outboard motor.

To remove the engine cover, pull the engine cover latch to the unlocked position, then lift the engine cover straight up from the outboard motor.

To install the engine cover, place the cover on the outboard motor, and push down evenly.

The cover should be tight at the mid-case point. If the cover is loose or difficult to secure, an adjustment may be necessary. Please see the shop manual or your Honda Marine dealer for adjustment.

Engine Oil Level Check

Check the engine oil level with the engine stopped and the outboard motor in the vertical position.

1. Unlock and remove the engine cover (p. 67).
2. Remove the dipstick and wipe it clean.

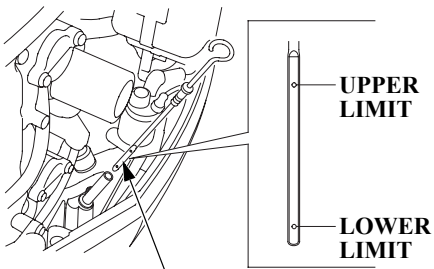

3. Insert the dipstick all the way in, then remove it and check the oil level shown on the dipstick.

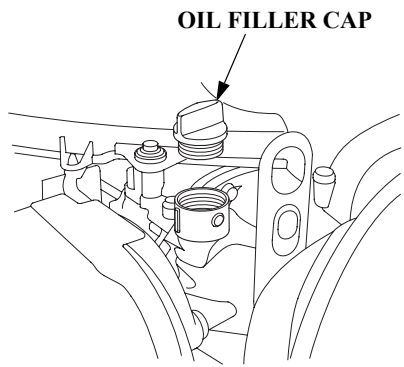

4. If the oil level is low, remove the oil filler cap, and add oil to reach the upper limit mark shown on the dipstick. Use the oil recommended on p. 72.

NOTICE

- *Running the engine with a low oil level can cause engine damage.*
- *Do not overfill. Overfilling the engine will cause it to smoke or have oil leaks.*

5. Install the oil filler cap and tighten it securely. Do not overtighten.
6. Install and lock the engine cover.

When you check the oil level with the dipstick, you might notice the engine oil appears milky or the oil level has increased. If you notice either condition, change the engine oil. See the following table for an explanation of these conditions.

Operating Method	Result	Effect
Running the engine below 3,000 rpm for more than 30% of the time so the engine does not warm up.	• Water condenses in the engine and mixes with the oil, resulting in a milky appearance. • Unburned fuel mixes with the oil, increasing the volume of oil.	The engine oil deteriorates, becomes less efficient as a lubricant, and causes an engine malfunction.
Frequent starting and stopping without allowing the engine to warm up.		

Engine Oil Change

An engine oil evacuation device may be used to remove the engine oil.

Drain the used oil while the engine is warm. Warm oil drains quickly and completely.

1. Unlock and remove the engine cover (p. 67).

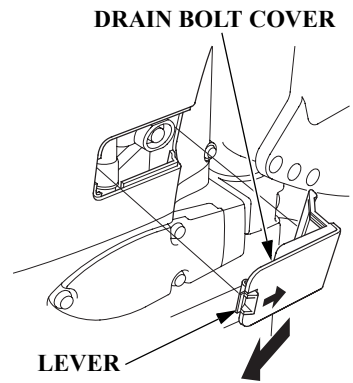

2. Push the drain bolt cover lever and remove the cover while pulling the cover backward at an angle.

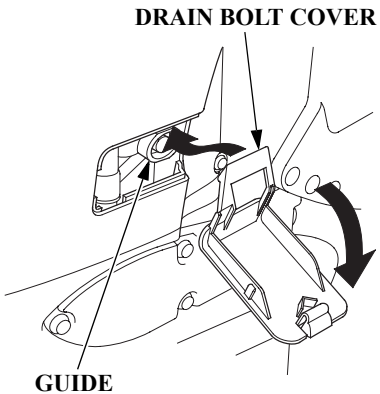

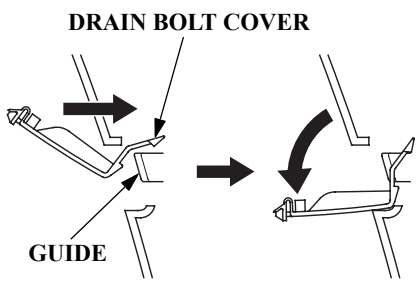

3. Set the drain bolt cover under the guide.

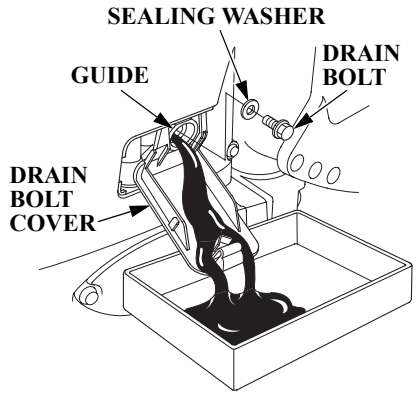

4. Place a suitable container below the oil drain guide to catch the used oil, and then remove the oil filler cap, drain bolt, and sealing washer.

5. Allow the used oil to drain completely. Use a new sealing washer, and then reinstall the engine oil drain bolt and washer. Tighten the drain bolt securely.

   DRAIN BOLT TIGHTENING TORQUE:
   17 lbf·ft (23 N·m , 2.3 kgf·m)

NOTICE

Improper disposal of engine oil can be harmful to the environment. If you change your own oil, please dispose of the used oil properly. Put it in a sealed container, and take it to a recycling center. Do not throw it in the trash, pour it on the ground or down a drain.

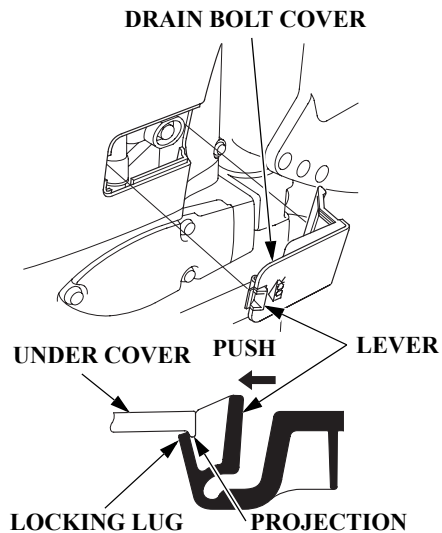

6. Install the oil drain bolt cover. Push the lever of the oil drain bolt cover in the direction pointed by the arrow mark of "LOCK", and install the oil drain bolt cover so that the locking lug securely sets on the projection of the under cover.

7. With the outboard motor in a vertical position, fill to the upper limit mark on the dipstick (p. 68) with the recommended oil.
   Engine oil refill capacity:
   Without oil filter change:
   6.9 US qt (6.5 L)
   With oil filter change:
   7.1 US qt (6.7 L)

8. Install the oil filler cap and tighten it securely.

9. Install and lock the engine cover.

Oil Filter Change

1. Drain the engine oil, and then reinstall the drain bolt and sealing washer. Reinstall the drain bolt cover (see *Engine Oil Change* on p. 69).

2. Tilt the outboard motor, and place a suitable container below the oil drain guide to catch the used oil.

3. Use a suitable tool to remove the oil filter, and thoroughly drain the filter into the used oil container.

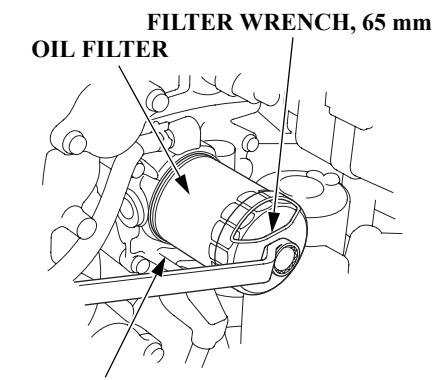

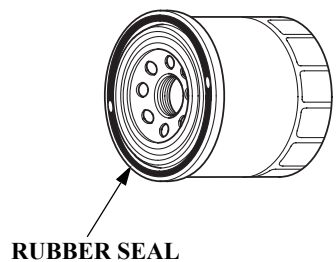

4. Clean the oil filter mounting base, and coat the rubber seal of the new oil filter with clean engine oil.

   NOTICE

   Use only a Honda Genuine oil filter or a filter of equivalent quality specified for your model. Using the wrong filter, or a non-Honda filter which is not of equivalent quality, may cause engine damage.

5. Screw on the new filter by hand until it contacts the engine, then use a suitable tool to tighten the filter an additional 3/4 turn.

   OIL FILTER TIGHTENING TORQUE:
   9 lbf·ft (12 N·m, 1.2 kgf·m)

6. Return the outboard motor to the vertical position, and fill the crankcase with the specified amount of the recommended oil.

   NOTICE

   Do not overfill. Overfilling the engine will cause it to smoke or have oil leaks.

7. Start the engine and check for leaks (be sure the water level is at least 2 inches (5 cm) above the antiventilation plate).

   If you are changing the oil filter while the outboard motor is out of the water, use commercially available ear muffs and water hose to supply water.

   NOTICE

   Running the outboard motor without sufficient cooling water will damage the water pump and overheat the engine.

8. Stop the engine, and check the oil level as described on page 68. If necessary, add oil to bring the oil level to the upper limit mark on the dipstick.

Engine Oil Recommendations

Oil is a major factor affecting performance and service life. Use 4-stroke detergent oil.

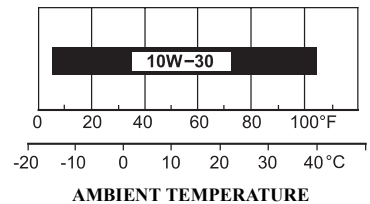

Honda 10W-30 FC-W® outboard motor oil is recommended for general use.

FC-W® is a registered trademark of the National Marine Manufacturers Association.

If Honda 10W-30 FC-W oil is not available, Honda recommends that you use API service category SG, SH or SJ oil. The SAE oil viscosity and service category are in the API label on the oil container.

Lubrication Points

Apply Honda Marine waterproof grease to the parts shown below:

NOTICE

Apply anticorrosion oil to pivot surfaces where grease cannot penetrate.

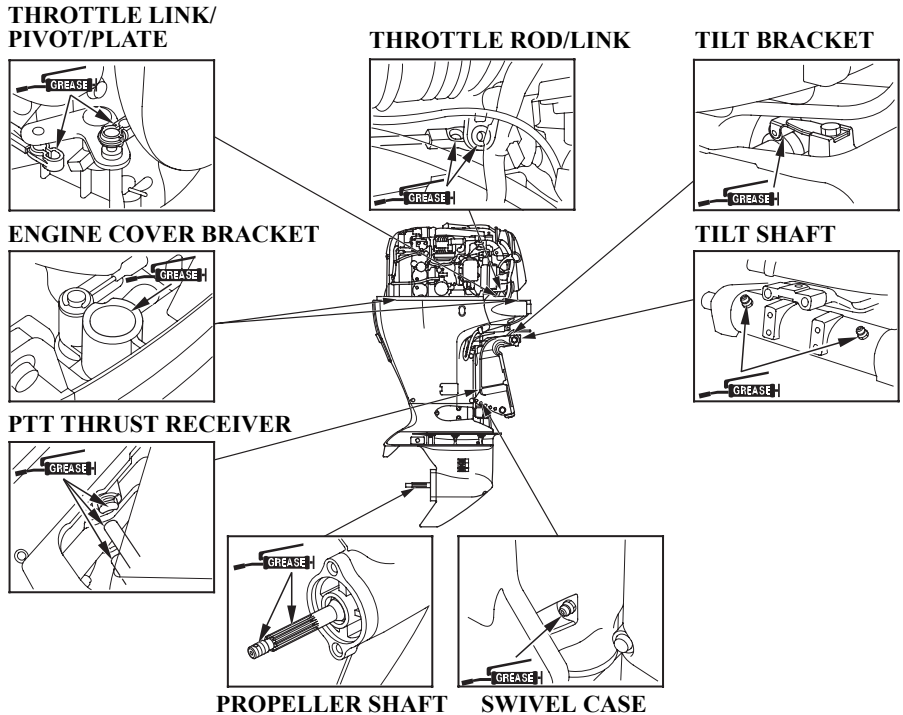

[Example: BF115D]

Apply Honda Marine Corrosion Inhibitor (or equivalent) to all areas under the engine cover and any exposed metal surfaces except the belts.

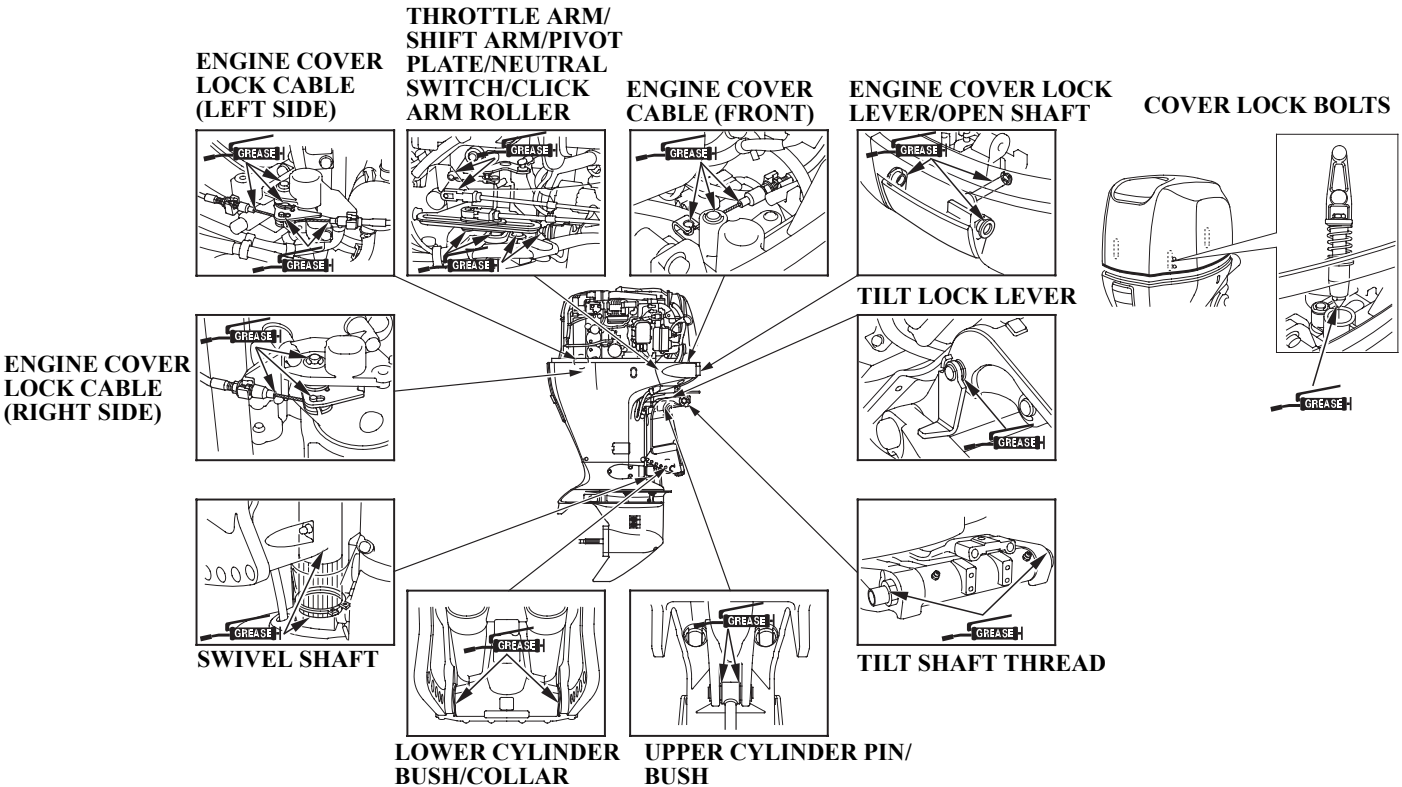

[Example: BF115D]

Spark Plug Service <Standard Spark Plug>

RECOMMENDED SPARK PLUGS:
ZFR6K-11 (NGK)
KJ20DR-M11 (DENSO)

NOTICE

Incorrect spark plugs can cause engine damage.

See page 78 for instructions of handling the Iridium spark plugs (optional parts).

1. Disconnect the battery negative (–) terminal.
2. Unlock and remove the engine cover (p. 67).

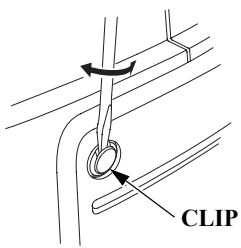

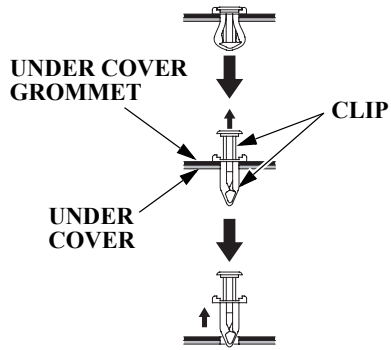

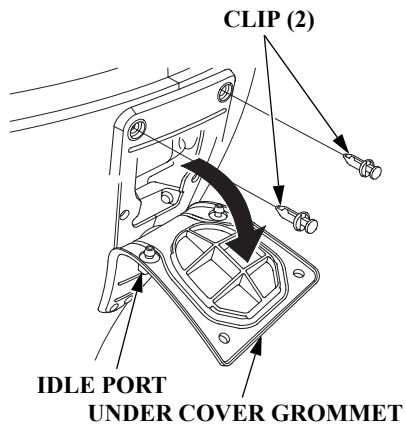

3. Remove the two clips from the upper part of the under cover grommet.
   To remove the clips, raise the inner part of each clip with a screwdriver, then pull out the clips.

NOTICE

Do not try to remove the clip with force without raising the inner part of the clip. Otherwise, it can damage the clip and/or under cover.

4. Fold down the upper part of the under cover grommet without removing it from the idle port.

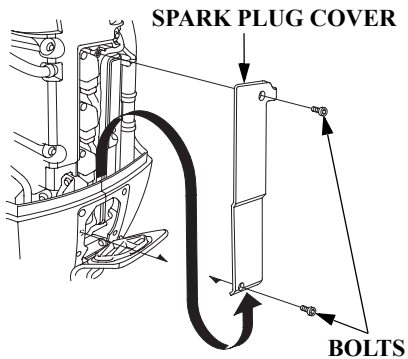

5. Remove the two bolts with the 6 mm hex. wrench, and remove the spark plug cover.

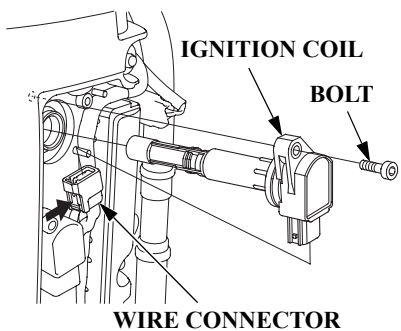

6. Use a 6 mm hex. wrench to remove the bolt holding the ignition coil. Move the ignition coil to a position that allows removal of the wire connector easily.

7. Disconnect the wire connector from the ignition coil by pushing on the lock tab and pulling on the connector. Pull on the plastic connector, not the wires.

8. Remove the ignition coil by pulling it up slightly.

NOTICE

Do not strike or drop the ignition coil, or it may be damaged and require replacement.

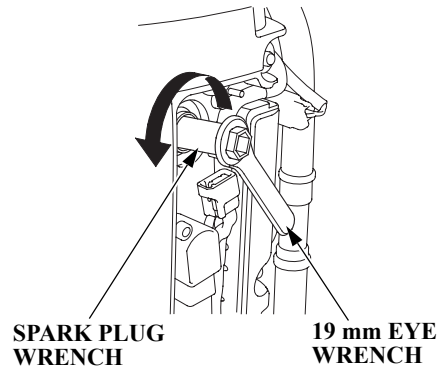

9. Remove the spark plugs with a spark plug wrench and 19 mm eye wrench.

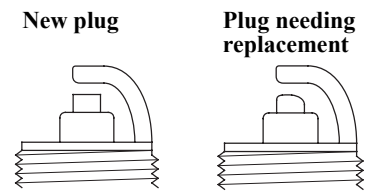

10. Inspect the spark plugs. Replace them if the electrodes are worn, or if the insulators are cracked or chipped.

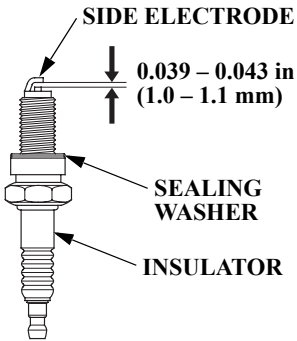

11. Measure the spark plug electrode gap with a wire-type feeler gauge. Correct the gap, if necessary, by carefully bending the side electrode.
    The gap should be:
    0.039 – 0.043 in (1.0 – 1.1 mm)

12. Install the spark plugs carefully, by hand, to avoid cross-threading.

13. After each spark plug seats, tighten with the spark plug wrench supplied in the tool kit to compress the sealing washer.

    If reinstalling used spark plugs, tighten 1/8 – 1/4 turn after the spark plugs seat.

    If installing new spark plugs, tighten 1/2 turn after the spark plugs seat.

    SPARK PLUG TORQUE:
    13 lbf·ft (18 N·m , 1.8 kgf·m)

NOTICE

Loose spark plugs can overheat and damage the engine. Overtightening the spark plugs can damage the threads in the cylinder head.

14. Push the wire connector onto the ignition coil. Make sure it locks in place.

15. Install the ignition coil. Reinstall the bolt.

16. Repeat this procedure for the other three spark plugs.

17. Reinstall the covers. When reinstalling the covers, make sure not to jam the wire harnesses between the covers and engine case.

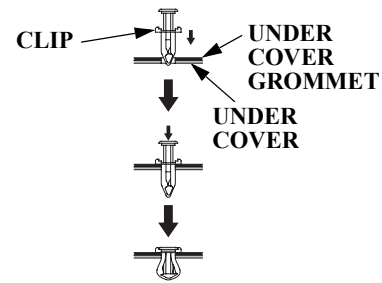

Clip installation:

- Press the under cover grommet and under cover and be sure that they adhere closely to each other.
- Insert the clips with the inner part raised off, then push in the inner part securely until they click.

<Optional Parts: Iridium Spark Plug>

RECOMMENDED SPARK PLUGS:
IZFR6K11 (NGK)
SKJ20DR-M11 (DENSO)

NOTICE

Incorrect spark plugs can cause engine damage.

Installation and removal procedure of the Iridium spark plugs are the same as the standard spark plugs.

These spark plugs have an iridium coated center electrode.
Be sure to observe the following when servicing iridium spark plugs.

- Do not clean the spark plugs. If an electrode is contaminated with accumulated objects or dirt, replace the spark plug with a new one.
- Use only a ‘‘wire-type feeler gauge’’ to check the spark plug gap if necessary. To prevent damaging the iridium coating of the center electrode, never use a ‘‘leaf-type feeler gauge.’’
  The gap should be 0.039 – 0.051 inches (1.0 – 1.3 mm).
- Do not adjust the spark plug gap. If the gap is out of specification, replace the spark plug with a new one.

REFUELING

If you do not anticipate cycling through at least one complete tank of fuel within a 30 day period, we recommend adding Honda Marine Fuel Stabilizer each time you refuel.

Check the fuel level and refill if necessary. Do not fill the fuel tank above the UPPER LIMIT. Refer to the boat manufacturer’s instructions.

⚠ WARNING

Gasoline is highly flammable and explosive, and you can be burned or seriously injured when handling fuel.

- Stop the engine and let it cool before handling fuel.
- Keep heat, sparks, and flame away.
- Handle fuel only outdoors.
- Wipe up spills immediately.

Never refill the fuel tank inside a building where gasoline fumes may reach flames or sparks. Keep gasoline away from appliance pilot lights, barbecues, electric appliances, power tools, etc.

Spilled fuel is not only a fire hazard, it causes environmental damage. Wipe up spills immediately.

NOTICE

Fuel can damage paint and plastic. Be careful not to spill fuel when filling your fuel tank. Damage caused by spilled fuel is not covered under warranty.

FUEL RECOMMENDATIONS

Use unleaded gasoline with a pump octane rating of 86 or higher.

Your outboard motor is certified to operate on unleaded gasoline. Unleaded gasoline produces fewer engine and spark plug deposits and extends exhaust system life.

Never use stale or contaminated gasoline or an oil/gasoline mixture. Avoid getting dirt or water in the fuel tank.

You may use unleaded gasoline containing no more than 10% ethanol (E10) or 5% methanol by volume. In addition, methanol must contain cosolvents and corrosion inhibitors. Use of fuels with content of ethanol or methanol greater than shown above may cause starting and/or performance problems. It may also damage metal, rubber, and plastic parts of the fuel system.

Engine damage or performance problems that result from using a fuel with percentages of ethanol or methanol greater than shown above are not covered under warranty.

If your outboard motor will be used on an infrequent or intermittent basis, please refer to the fuel section of the *STORAGE* chapter (p. 89) for additional information regarding fuel deterioration.

Fuel Filter Inspection and Replacement

The fuel filter (inside the strainer cup) is located below the intake manifold.

Water or sediment accumulation in the filter can cause loss of power or hard starting. To prevent engine malfunction, inspect the filter and replace when necessary.

⚠ WARNING

Gasoline is highly flammable and explosive, and you can be burned or seriously injured when handling fuel.

- Stop the engine and let it cool before handling fuel.
- Keep heat, sparks, and flame away.
- Handle fuel only outdoors.
- Wipe up spills immediately.

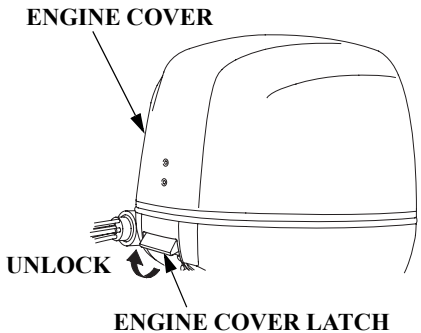

1. Remove the engine cover (p. 67).

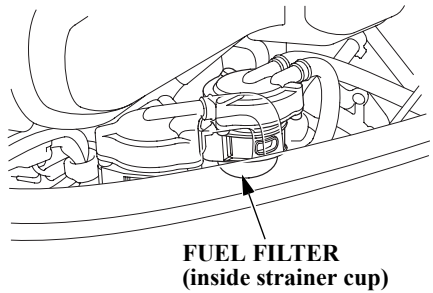

2. Looking through the translucent strainer cup, check the fuel filter for water accumulation or sediment.

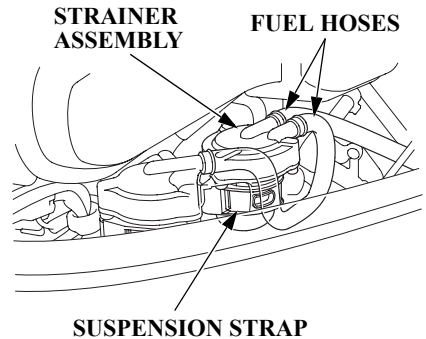

3. Remove the strainer assembly. If it is difficult to remove the strainer assembly by yourself, consult an authorized Honda Marine dealer. Remove the suspension strap from the fuel filter bracket, and then remove the strap from the fuel filter assembly.

4. Before removing the fuel filter, to prevent fuel leakage, place fuel hose clamps on the fuel hoses on each side of the fuel filter.

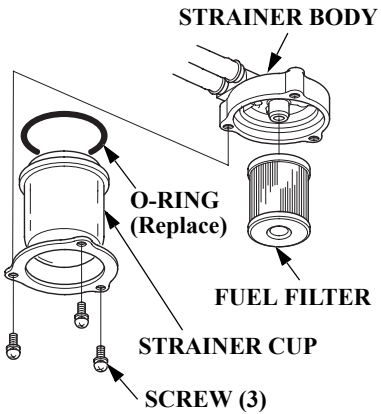

5. Remove the three screws and separate the fuel strainer cup from the strainer body.

6. Thoroughly clean the strainer cup, and replace the fuel filter.

7. Reassemble the strainer body and the cup using a new O-ring.
   STRAINER TIGHTENING TORQUE:
   2.5 lbf·ft (3.4 N·m, 0.35 kgf·m)

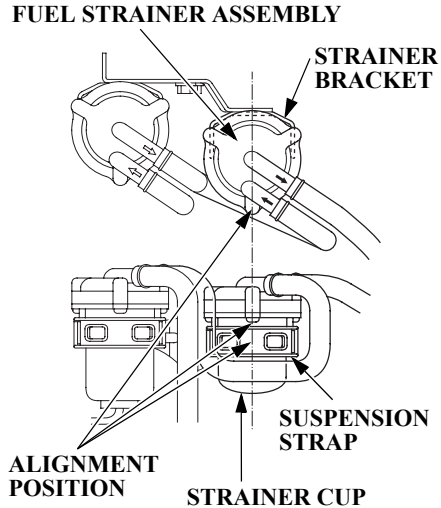

8. Align the center of suspension strap with the screw position and install the fuel strainer assembly.

9. Reinstall the strainer assembly in the original position.

10. Prime the engine using the priming bulb (p. 42). Check for fuel leaks.
    Repair any fuel leaks if necessary.

If loss of power or hard starting are found to be caused by excessive water or sediment accumulation in the fuel filter, inspect the fuel tank.

Clean the fuel tank and tank filter if necessary. It may be necessary to drain the fuel tank completely and refill with fresh gasoline.

Water Separator Inspection and Service

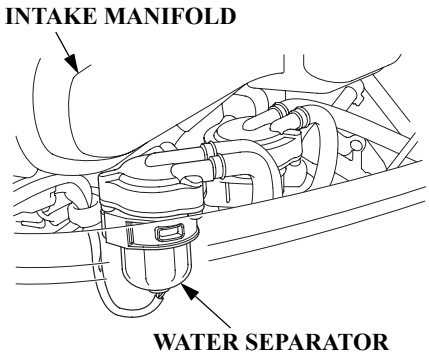

The water separator is located below the intake manifold. Water accumulation in the water separator can cause loss of power or hard starting. Check the water separator periodically. Clean it or consult with an authorized Honda Marine dealer for cleaning.

⚠ WARNING

Gasoline is highly flammable and explosive, and you can be burned or seriously injured when handling fuel.

- Stop the engine and let it cool before handling fuel.
- Keep heat, sparks, and flame away.
- Handle fuel only outdoors.
- Wipe up spills immediately.

1. Remove the engine cover (p. 67).
2. Remove the separator assembly. If it is difficult to remove the separator assembly by yourself, consult an authorized Honda Marine dealer.

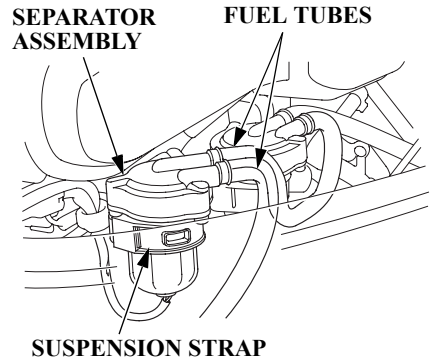

Remove the suspension strap from the water separator bracket; then remove the strap from the separator assembly.
During removal of the separator assembly, take care not to damage the wire harness with the separator bracket.

3. Pinch the fuel tubes with tube clamps to prevent fuel leakage.

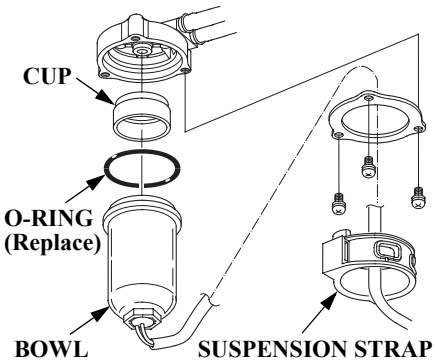

4. Remove the three screws and separate the bowl from the body.

5. Thoroughly clean the bowl.

6. Reassemble the water separator bowl and cup. Use a new O-ring.
   TIGHTENING TORQUE:
   2.5 lbf·ft (3.4 N·m, 0.35 kgf·m)

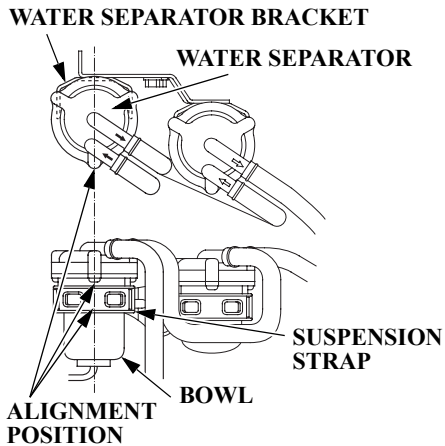

7. Align the center of suspension strap with the screw position and install the water separator assembly.

8. Reinstall the water separator in the reverse order of removal.

9. Squeeze and release the priming bulb to fill the vapor separator, and check for fuel leaks. Repair any fuel leaks if necessary.

If the buzzer sounds or water or sediment accumulation are found to be caused by excessive water or sediment accumulation in the fuel filter, inspect the fuel tank.

Clean the fuel tank and tank filter if necessary. It may be necessary to drain the fuel tank completely and refill with fresh gasoline.

Anode Replacement

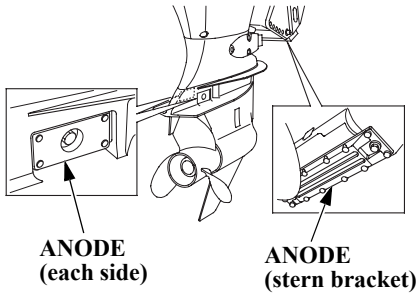

The anodes are located on each side of the gear case and on the stern bracket. They are made of a sacrificial material that helps to protect the outboard motor from corrosion.

Replace the anodes when they have been reduced to about one third their original size, or if they are crumbling.

NOTICE

Painting or coating the anodes will defeat their purpose and will lead to rust and corrosion damage to the outboard motor. The anodes must be exposed to the water in order to protect the outboard motor.

Propeller Replacement

Before replacing the propeller, remove the emergency stop switch clip from the emergency stop switch to prevent any possibility of the engine being started while you are working with the propeller.

The propeller blades may have sharp edges, so wear heavy gloves to protect your hands.

Operating the outboard motor at higher altitudes will reduce available power. This may require decreasing the propeller pitch to maintain correct engine RPM.

Removal

1. Remove the cotter pin, unscrew the castle nut, remove the washer, and then remove the propeller and thrust washer.
2. Inspect the propeller shaft for any fishing line or debris.

Installation

1. Apply marine grade grease to the propeller shaft.
2. Install the thrust washer with the grooved side toward the gear case.
3. Install the propeller.
4. Install the washer with as shown.
5. Lightly tighten the castle nut by hand or wrench until the propeller has no free play.
6. Tighten the castle nut using a torque wrench.
   CASTLE NUT TIGHTENING TORQUE:
   0.7 lbf·ft (1 N·m, 0.1 kgf·m)
7. Then, using a torque wrench, tighten the castle nut until the first available groove in the castle nut aligns with the cotter pin hole. Do not tighten past the first alignment of the castle nut groove and the cotter pin hole.

NOTICE

TIGHTENING TORQUE LIMIT:
33 lbf·ft (44 N·m, 4.5 kgf·m)
Do not tighten the castle nut above the TIGHTENING TORQUE LIMIT, or the propeller and shaft may be damaged.

8. Be sure to replace the cotter pin with a new one.
   - Use a Honda Genuine stainless steel cotter pin or equivalent cotter pin and bend the pin ends as shown.

Note that these wrenches are not included with the tool set that comes with the outboard motor. Contact your authorized Honda Marine dealer for additional tool information.

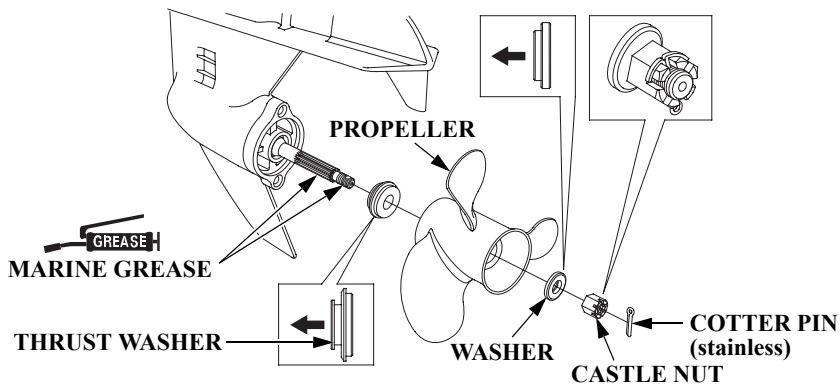

Cleaning and Flushing

After each use in salt water or dirty water, thoroughly clean and rinse the outboard motor with fresh water.

Touch up any damaged paint, and coat areas that may rust with Honda Corrosion Inhibitor, or equivalent. Lubricate controls with a silicone spray lubricant.

NOTICE

Do not apply water or corrosion inhibitor directly to the electrical components under the engine cover, such as the AC generator, HO2S sensor, or the AC generator belt. If water or corrosion inhibitor penetrates these components, they may be damaged. Before applying a corrosion inhibitor, cover the AC generator, belt and HO2S sensor with a protective material to prevent damage.

Cleaning

Wash the outside of the outboard motor with clean, fresh water, and flush the cooling system as follows.

Flushing With a Garden Hose (commercially available)

NOTICE

Do not run the engine when flushing the outboard motor with a garden hose or the outboard motor may be damaged.

For safety, remove the emergency stop switch clip so the engine cannot be started while you are standing near the propeller.

1. Disconnect the fuel hose from the outboard motor.
2. Tilt down the outboard motor.
3. Clean and wash the outside of the outboard motor with fresh water.

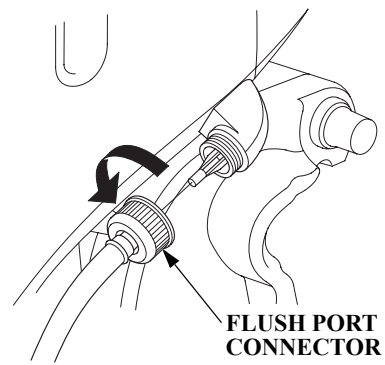

4. Disconnect the flush port connector.

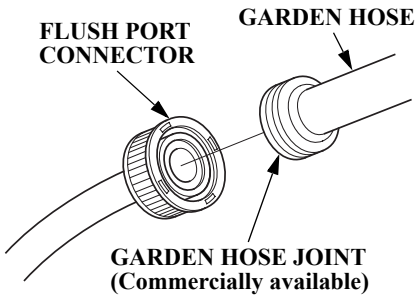

5. Screw the flush port connector onto the garden hose.

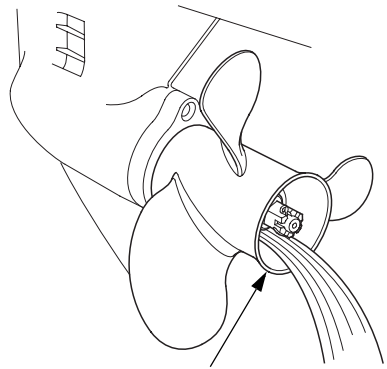

6. Turn on the fresh water supply and flush the outboard motor for at least 10 minutes.

7. After flushing, disconnect the garden hose and reconnect the flush port connector.

8. Tilt up the outboard motor and move the tilt lock lever to the LOCK position.

Fuel

NOTICE

Depending on the region where you operate your outboard, fuel formulations may deteriorate and oxidize rapidly. Fuel deterioration and oxidation can occur in as little as 15 days and may cause damage to the fuel system. Please check with your servicing dealer for local storage recommendations.

Gasoline will oxidize and deteriorate in storage. Old gasoline will cause hard starting, and it leaves gum deposits that clog the fuel system. If the gasoline in your fuel tank and vapor separator deteriorates during storage, you may need to have the vapor separator and other fuel system components serviced or replaced.

The length of time that gasoline can be left in your fuel tank and vapor separator without causing functional problems will vary with such factors as gasoline blend, your storage temperatures, and whether the fuel tank is partially or completely filled. The air in a partially filled fuel tank promotes fuel deterioration. Very warm storage temperatures accelerate fuel deterioration. Fuel deterioration problems may occur in less than 15 days, if the gasoline was not fresh when you filled the fuel tank.

You can extend fuel storage life by adding a gasoline stabilizer that is formulated for that purpose, or you can avoid fuel deterioration problems by draining all the fuel from the fuel tank and vapor separator.

The *Distributor's Limited Warranty* (p. 119) does not cover fuel system damage or engine performance problems resulting from neglected storage preparation. See page 79 for additional information on fuel recommendations.

Adding a Fuel Stabilizer

When adding a fuel stabilizer, fill the fuel tank with fresh gasoline. If only partially filled, air in the tank will promote fuel deterioration during storage. If you keep an additional container of gasoline for refueling, be sure that it contains only fresh gasoline.

1. Drain the vapor separator before adding fuel stabilizer.
2. Add Honda Marine fuel stabilizer following the instructions on the label.
3. After adding a fuel stabilizer, run the engine in water for 10 minutes to be sure that the treated gasoline has replaced the untreated gasoline in the vapor separator.
4. Turn the engine OFF.

Draining the Fuel System

You can avoid fuel deterioration problems by draining the fuel tank and vapor separator.

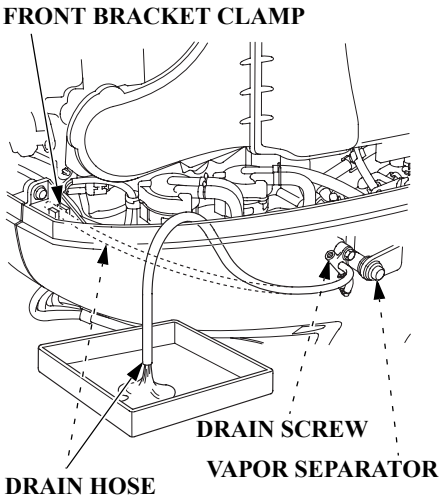

1. Unhook the drain hose from the front bracket clamp.
2. Set the end of the hose toward the outside of the engine undercase. Place an approved gasoline container below the fuel drain outlet, and use a funnel to avoid spilling fuel.
3. Loosen the vapor separator drain screw.

⚠ WARNING

Gasoline is highly flammable and explosive, and you can be burned or seriously injured when handling fuel.

- Stop the engine and let it cool before handling fuel.
- Keep heat, sparks, and flame away.
- Handle fuel only outdoors.
- Wipe up spills immediately.

4. Tilt the outboard motor up all the way. Leave the outboard motor tilted up until the gasoline stops flowing.

5. After thoroughly draining, tighten the drain screw securely and return the outboard motor to the vertical position.

6. Clamp the drain hose on the front bracket clamp.

7. Drain the fuel tank into an approved gasoline container, or if you need to store fuel in the fuel tank, you can extend fuel storage life by filling the fuel tank with fresh gasoline and adding Honda Marine fuel stabilizer following the directions on the container.

Engine Oil

1. Change the engine oil and the oil filter (p. 68 – 72).

2. Remove the spark plugs (p. 75), and remove the emergency stop switch clip from the emergency stop switch.

3. Pour 1 – 2 teaspoons (5 – 10 cm^3) (p. 106) of clean engine oil into each cylinder.

4. Rotate the engine a few revolutions to distribute the oil in the cylinders.

5. Reinstall the spark plugs (p. 77).

HOISTING THE OUTBOARD MOTOR

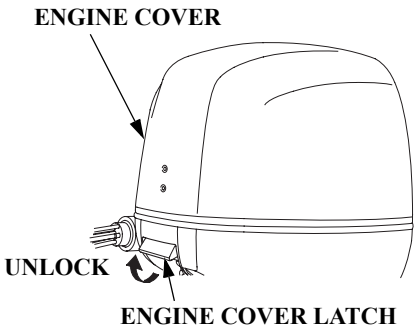

1. Remove the engine cover (p. 67).

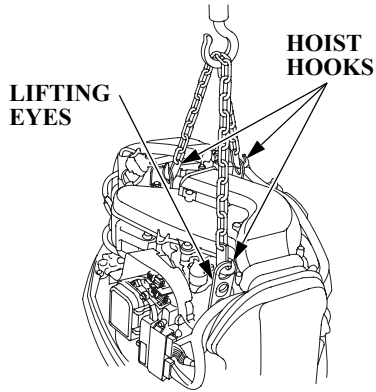

2. Attach the hoist hooks to the lifting eyes.
3. Disconnect the outboard motor from the boat, hoist the outboard motor, and move it to the storage area.
4. After the outboard motor is placed in storage and disconnected from the hoist, install the engine cover.

STORAGE PRECAUTIONS

Select a well-ventilated storage area. If possible, avoid storage areas with high humidity.

If storing a container of gasoline, store it away from any appliance that operates with a flame, such as a furnace, water heater, or clothes dryer. Also avoid any area with a spark producing electric motor, or where power tools are operated.

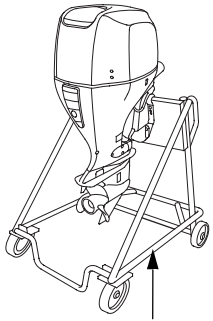

OUTBOARD MOTOR STAND

If the outboard motor will be removed from the boat for storage, we recommend storing it vertically by mounting it on a commercially available stand.

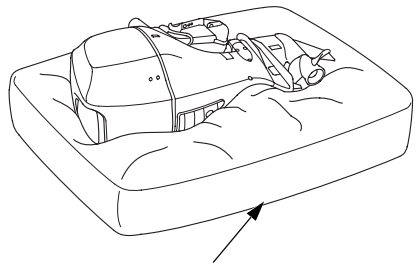

PROTECTOR

If it is necessary to store the outboard motor horizontally as shown, drain the vapor separator (p. 90), and drain the engine oil (p. 69), before removing the outboard motor from the boat.

Rest the outboard motor on a cushion of protective material.

Cover the outboard motor to keep out dust. Do not use plastic sheet as a dust cover. A nonporous cover will trap moisture, promoting rust and corrosion.

REMOVAL FROM STORAGE

Check your outboard motor as described in the *BEFORE OPERATION* chapter of this manual.

If the cylinders were coated with oil during storage preparation, the engine may smoke briefly at startup. This is normal.

TRANSPORTING

WITH OUTBOARD MOTOR INSTALLED ON BOAT

When trailering a boat with the outboard motor attached, always disconnect the fuel line from the fuel tank.

Use an outboard motor support bar to prevent the outboard motor from moving while trailering the boat. Refer to the manufacturer's instructions for using an outboard motor support bar.

The preferred method is to leave the engine in the normal running position, but if there is insufficient road clearance, you can tilt the outboard motor using a commercially available outboard motor support bar available through your dealer. Refer to the manufacturer's instructions for using an outboard motor support bar.

OUTBOARD MOTOR SUPPORT BAR (commercially available)

WITH OUTBOARD MOTOR REMOVED FROM BOAT

Secure the outboard motor in either the vertical or horizontal position shown on p. 93.

ELECTRIC STARTER WILL NOT OPERATE

Possible Cause	Correction
Battery connections loose or corroded.	Clean and tighten battery connections.
Battery discharged.	Recharge battery.
Fuse(s) blown.	Replace fuse(s) (p. 100).
Fuel system malfunction, fuel pump failure, ignition malfunction, stuck valves, starter malfunction, switch malfunction, or electrical problem in the starting circuit, etc.	Use starting procedure (p. 43, 46, 48); if engine still will not start, then take outboard motor to an authorized Honda Marine dealer, or refer to the shop manual.

ENGINE WILL NOT START

Possible Cause	Correction
Clip not inserted in emergency stop switch.	Insert clip in emergency stop switch.
Control lever not in neutral position.	Shift to neutral.
Fast idle lever raised (side-mount type).	Leave fast idle lever OFF (p. 44).
Out of fuel.	Refuel (p. 78).
Fuel hose not primed.	Squeeze priming bulb (p. 42).
Fuel filter or fuel tank filter clogged.	Replace fuel filters (p. 80).
Bad fuel; outboard motor stored without treating or draining gasoline, or refueled with bad gasoline.	Drain fuel tank and vapor separator (p. 90). Refill with fresh gasoline (p. 78).

ENGINE WILL NOT START

Possible Cause	Correction
Water separator full of water accumulation.	Clean water separator (p. 83).
Spark plugs faulty, fouled, or improperly gapped.	Gap (non-iridium type) or replace spark plugs (p. 75).
Spark plugs wet with fuel (flooded engine).	Dry and reinstall spark plugs. Start engine with the throttle open.
Fuel system malfunction, fuel pump failure, ignition malfunction, etc.	Take outboard motor to an authorized Honda Marine dealer, or refer to the shop manual.

HARD STARTING OR STALLS AFTER STARTING

Possible Cause	Correction
Fast idle lever raised (side-mount type).	Leave fast idle lever OFF (p. 44).
Fuel hose not primed.	Squeeze priming bulb (p. 42).
Fuel filter or fuel tank filter clogged.	Replace fuel filters (p. 80).
Bad fuel; outboard motor stored without treating or draining gasoline, or refueled with bad fuel.	Drain fuel tank and vapor separator (p. 90). Refill with fresh gasoline (p. 78).
Water separator full of water accumulation.	Clean water separator (p. 83).

HARD STARTING OR STALLS AFTER STARTING

Possible Cause	Correction
Spark plugs faulty, fouled, or improperly gapped.	Gap (non-iridium type) or replace spark plugs (p. 75).
Fuel system malfunction, fuel pump failure, ignition malfunction, etc.	Take outboard motor to an authorized Honda Marine dealer, or refer to the shop manual.

ENGINE OVERHEATS

Possible Cause	Correction
Water intake screens clogged.	Clean water intake screens.
Faulty thermostat or water pump.	Take outboard motor to an authorized Honda Marine dealer, or refer to the shop manual.

FUSES

Electric Starter Will Not Operate

The 10 A, 15 A, and 30 A main fuses protect the electric starter relay and related circuits.

The 10 A (No. 5) main fuse protects the ignition switch and related circuits. If this fuse blows, the engine will not start or run, and the power trim/tilt switch will not activate the trim/tilt mechanism.

Battery Will Not Charge

A 100 A ACG fuse protects the alternator circuit. If the ACG fuse blows, the engine will not charge the battery. Refer to p. 102.

Fuse Replacement

NOTICE

Disconnect the battery cable at the battery negative (–) terminal before replacing the fuse.
Failure to do so may cause a short circuit.

Main Fuse

1. Stop the engine and disconnect the battery cable.

2. Remove the engine cover.

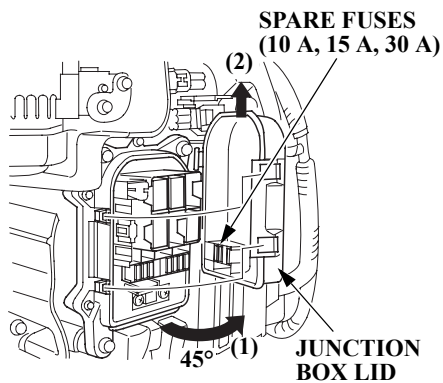

3. Remove the junction box lid.

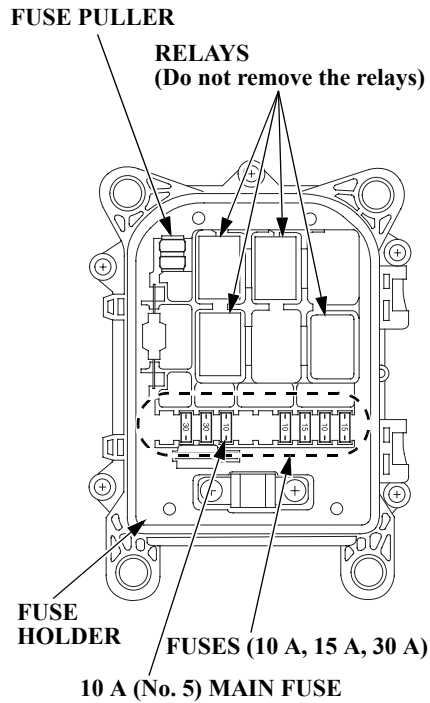

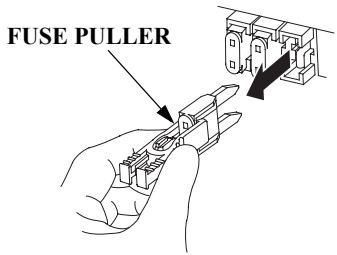

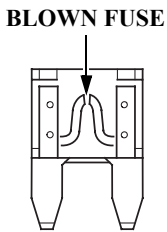

4. Use the fuse puller from the fuse holder to remove the fuses. If a fuse is blown, install a replacement fuse of the same specified rating.
   The outboard motor is supplied with spare fuses in the junction box lid.

   MAIN FUSE RATINGS:
   10 A, 15 A, 30 A

5. Reinstall the junction box lid, and the engine cover.

6. Reconnect the battery.

NOTICE

Never use a fuse with a rating greater than specified. Serious damage to the electrical system could result.

If a blown fuse is found, try to determine and correct the electrical problem that caused the blown fuse. An uncorrected electrical problem may cause the fuse to blow again.

If fuses continue to blow, take the outboard motor to an authorized Honda Marine dealer for inspection and service, or refer to the shop manual.

ACG Fuse

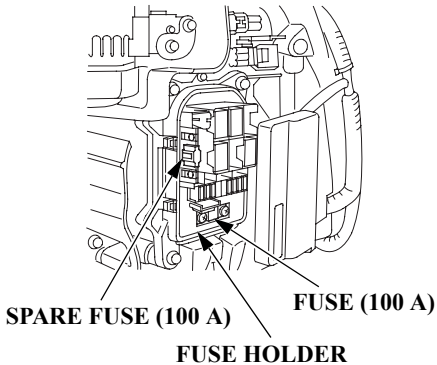

1. Stop the engine and disconnect the battery cable.
2. Remove the engine cover.
3. Remove the junction box lid (see page 100).
4. Remove the old fuse by removing two 5 mm screws.
5. Install a new fuse with the "100 A."

   ACG FUSE: 100 A
6. Reinstall the junction box lid, and the engine cover.
7. Reconnect the battery.

A spare fuse is located on the fuse holder.

OIL PRESSURE INDICATOR GOES OFF AND ENGINE SPEED IS LIMITED

Side-Mount Type

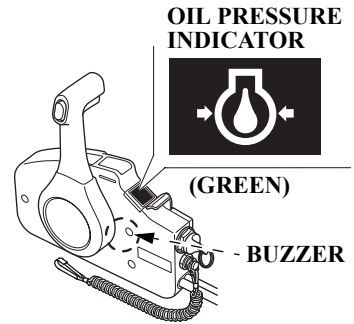

Panel-Mount/Top-Mount Types

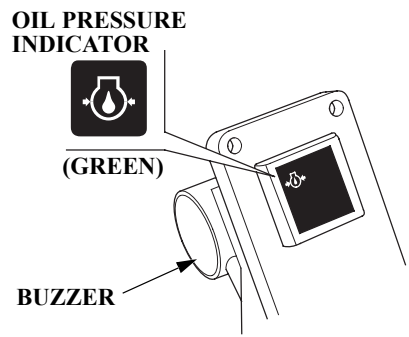

If oil pressure becomes low, the oil pressure indicator will go off, and the engine protection system limits engine speed. If you are at cruising speed, engine speed will decrease automatically.

The oil pressure indicator is also equipped with a buzzer that sounds when the oil pressure indicator goes off.

Low oil pressure may be the result of a low engine oil level, or there may be a problem with the engine lubrication system.

If the throttle is closed suddenly after full throttle operation, engine speed may drop below the specified idle rpm, and that could activate the engine protection system momentarily.

If low oil pressure activates the engine protection system, stop the engine, check the engine oil level (p. 68), and add oil if needed.

With the engine oil at the recommended level, restart the engine. If the lubrication system is OK, the oil pressure indicator should come on within 30 seconds, and the engine will respond normally to throttle control lever operation.

If the engine protection system remains activated after 30 seconds, return to the nearest boat landing, and have the outboard motor inspected by an authorized Honda Marine dealer.

OVERHEAT INDICATOR COMES ON AND ENGINE SPEED IS LIMITED

Side-Mount Type

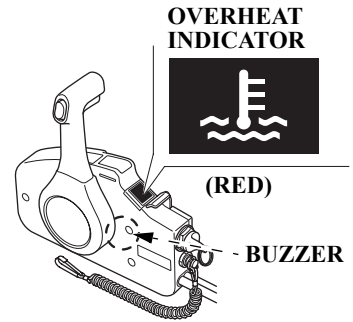

Panel-Mount/Top-Mount Types

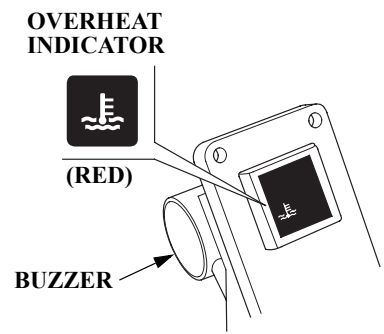

If the engine overheats, the overheat indicator will come on, and the engine will stop in 20 seconds after the engine protection system limits engine speed. If you are at cruising speed, engine speed will decrease automatically.

All types are equipped with a buzzer that sounds when the overheat indicator comes on.

Engine overheating may be the result of restricted water intake screens, or there may be a problem with the cooling system thermostat or water pump.

If the engine is stopped after running at full throttle, and then restarted soon afterward, that could activate the engine protection system momentarily.

COOLING SYSTEM INDICATOR

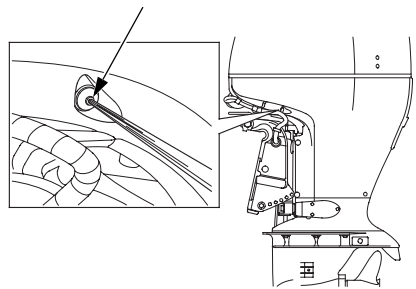

If overheating activates the engine protection system, idle the engine in neutral, and check the cooling system indicator.

If water is flowing from the cooling system indicator, continue idling for 30 seconds. If the cooling system is OK, the overheat indicator should go off within 30 seconds, and the engine will respond normally to throttle control lever operation.

If there is no water flowing from the cooling system indicator, stop the engine, and tilt the outboard motor to inspect the water intake screens. If restricted, clean the water intake screens, return the outboard motor to the running position, restart the engine, and check the cooling system indicator again.

If there is still no water flowing from the cooling system indicator, or if the engine protection system remains activated after 30 seconds, return to the nearest boat landing, and have the outboard motor inspected by an authorized Honda Marine dealer.

WATER SEPARATOR BUZZER SOUNDS

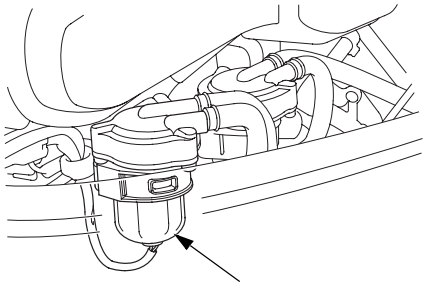

When the water separator buzzer sounds (a rapid, repeating signal):

Check the water separator for water contamination. If water is present, stop the engine, and clean the water separator following the instructions on page 83, or consult with an authorized Honda Marine dealer.

SUBMERGED OUTBOARD MOTOR

A submerged outboard motor must be serviced immediately after it is recovered from the water in order to minimize corrosion.

If there is a Honda Marine dealership nearby, take the outboard motor to the dealer immediately. If you are far from a dealership, proceed as follows:

1. Remove the engine cover, and rinse the outboard motor with fresh water to remove salt water, sand, mud, etc.

2. Drain the vapor separator as described on p. 90.

3. Change the engine oil and oil filter as described on p. 68 – 72. If there was water in the engine crankcase, or if the used engine oil showed signs of water contamination, then a second engine oil change should be performed after running the engine for half an hour.

4. Remove the spark plugs (p. 75). Operate the starter to expel water from the engine's cylinder.

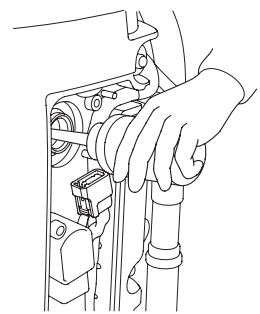

5. Pour a teaspoon (p. 91) of engine oil into each spark plug hole to lubricate the inside of the cylinders. Reinstall the spark plugs.

   If the engine was running when it submerged, there may be mechanical damage, such as bent connecting rods. If the engine binds when cranked, do not attempt to run the engine until it has been repaired.

6. Attempt to start the engine (be sure the water level is at least 2 inches above the antiventilation plate).

If you are changing the oil filter while the outboard motor is out of the water, use commercially available ear muffs and water hose to supply water.

NOTICE

Running the outboard motor without sufficient cooling water will damage the water pump and overheat the engine.

   If the engine fails to start, remove the spark plugs and dry them, then reinstall the spark plugs and attempt to start the engine again.

   If the engine starts, and no mechanical damage is evident, continue to run the engine for a half hour or longer. Be sure the water level is at least 2 inches (5 cm) above the antiventilation plate to avoid overheating and water pump damage.

7. As soon as possible, take the outboard motor to an authorized Honda Marine dealer for inspection and service.

Serial Number Locations

Record the product identification number, the engine serial number, and the date of purchase in the space provided on this page. You will need these numbers when ordering parts, and when making technical or warranty inquiries (p. 116).

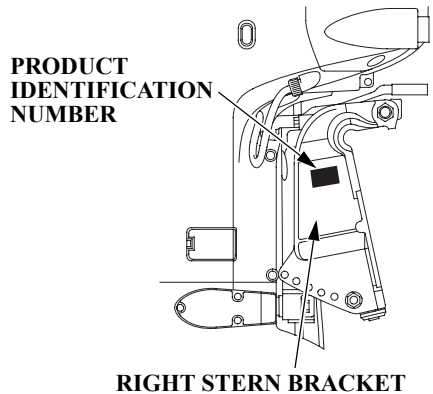

The product identification number is stamped on a plate attached on the right side of the stern bracket.

Product identification number:

_____

Date of purchase:

_____

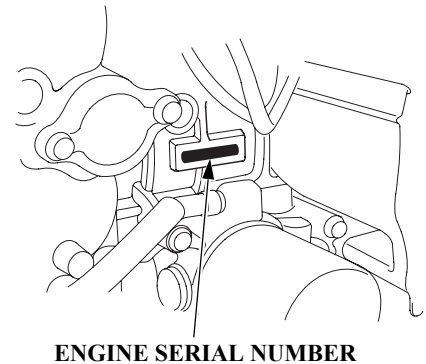

The engine serial number is stamped on the upper right side of the engine.

Engine serial number:

_____

Battery

For complete information, refer to the battery manufacturer's instructions.

Minimum Requirements

12 V – 64 Ah/5 HR (80 Ah/20 HR) (CCA622)

NOTICE

- *Be careful to avoid connecting the battery in reverse polarity, as this will damage the battery-charging system in the outboard motor.*
- *Do not disconnect the battery cables while the engine is running. Disconnecting the cables while the engine is running will damage the outboard motor's electrical system.*
- *Battery cable extension: Extending the original battery cable will cause the battery voltage to drop due to the increased length of the cable and number of connections. This voltage drop may cause the buzzer to sound momentarily when engaging the starter motor and may prevent the engine from starting. If the engine starts and the buzzer sounds momentarily, there may be barely sufficient voltage reaching the engine.*

WARNING: Battery posts, terminals, and related accessories contain lead and lead compounds. **Wash your hands after handling.**

Emission Control System Information

Source of Emissions

The combustion process produces carbon monoxide, oxides of nitrogen, and hydrocarbons. Control of hydrocarbons and oxides of nitrogen is very important because, under certain conditions, they react to form photochemical smog when subjected to sunlight. Carbon monoxide does not react in the same way, but it is toxic.

Honda utilizes appropriate air/fuel ratios and other emissions control systems to reduce the emissions of carbon monoxide, oxides of nitrogen, and hydrocarbons.

PGM-FI System

The PGM-FI system uses sequential multiport fuel injection. It has three subsystems: Air Intake, Engine Control, and Fuel Control. The Engine Control Module (ECM) uses various sensors to determine how much air is going into the engine. It then controls how much fuel to inject under all operating conditions.

Ignition Timing Control System

The system constantly adjusts the ignition timing, reducing the amount of HC, CO, and NOx produced.

The U.S., California Clean Air Acts, and Environment Canada

EPA, California, and Canadian regulations require all manufacturers to furnish written instructions describing the operation and maintenance of emission control systems.

The following instructions and procedures must be followed in order to keep the emissions from your Honda engine within the emission standards.

Tampering and Altering

NOTICE

Tampering is a violation of Federal and California law.

Tampering with or altering the emission control system may increase emissions beyond the legal limit. Among those acts that constitute tampering are:

- Removal or alteration of any part of the intake, fuel, or exhaust systems.
- Alterations that would cause the engine to operate outside its design parameters.

Problems That May Affect Emissions

If you are aware of any of the following symptoms, have your engine inspected and repaired by your servicing dealer.

- Hard starting or stalling after starting
- Rough idle
- Misfiring or backfiring under load
- Afterburning (backfiring)
- Black exhaust smoke or high fuel consumption

Replacement Parts

The emission control systems on your Honda engine were designed, built, and certified to conform with EPA, California, and Canadian emission regulations. We recommend the use of Honda Genuine parts whenever you have maintenance done. These original-design replacement parts are manufactured to the same standards as the original parts, so you can be confident of their performance. The use of replacement parts that are not of the original design and quality may impair the effectiveness of your emission control system.

A manufacturer of an aftermarket part assumes the responsibility that the part will not adversely affect emission performance. The manufacturer or rebuilder of the part must certify that use of the part will not result in a failure of the engine to comply with emission regulations.

Maintenance

Follow the maintenance schedule on page 64 and 65. Remember that this schedule is based on the assumption that your machine will be used for its designed purpose. Sustained high-load operation, or use in unusual conditions, will require more frequent service.

Star Label

US, Puerto Rico, and US Virgin Islands

A Star label was applied to this outboard motor in accordance with the requirements of the California Air Resources Board.

The Star Label means Cleaner Marine Engine

This engine has been certified as a:

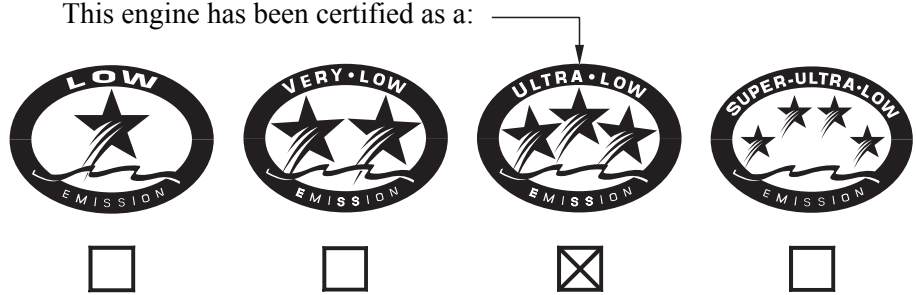

The Symbol for Cleaner Marine Engines:

Cleaner Air and Water - for healthier lifestyle and environment.

Better Fuel Economy - burns up to 30 - 40 percent less gas and oil than conventional carbureted two-stroke engines, saving money and resources.

Longer Emission Warranty - protects consumer for worry-free operation.

One Star Low Emission

The one-star label identifies engines that meet the Air Resources Board's Personal Watercraft and Outboard marine engine 2001 exhaust emission standards. Engines meeting these standards have 75% lower emissions than conventional carbureted two-stroke engines. These engines are equivalent to the U.S. EPA's 2006 standards for marine engines.

Two Stars Very Low Emission

The two-star label identifies engines that meet the Air Resources Board's Personal Watercraft and Outboard marine engine 2004 exhaust emission standards. Engines meeting these standards have 20% lower emissions than One Star-Low Emission engines.

Three Stars Ultra Low Emission

The three-star label identifies engines that meet the Air Resources Board's Personal Watercraft and Outboard marine engine 2008 exhaust emission standards or the Sterndrive and Inboard marine engine 2003-2008 exhaust emission standards. Engines meeting these standards have 65% lower emissions than One Star-Low Emission engines.

Four Stars Super Ultra Low Emission

The four-star label identifies engines that meet the Air Resources Board's Sterndrive and Inboard marine engine 2009 exhaust emission standards. Personal Watercraft and Outboard marine engines may also comply with these standards. Engines meeting these standards have 90% lower emissions than One Star-Low Emission engines.

Cleaner Watercraft - Get the Facts
1-800-END-SMOG
www.arb.ca.gov

Specifications

MODEL	BF115D				
Description code	BBHJ				
Type	LA	LC	XA	XC	XCA
Overall length	33.3 in (845 mm)				
Overall width	22.8 in (580 mm)				
Overall height	65.6 in (1,665 mm)		70.5 in (1,790 mm)		
Transom height (when transom angle at 12°)	20.0 in (508 mm)		25.0 in (635 mm)		
Dry mass [weight]*	478 lbs (217 kg)		485 lbs (220 kg)		492 lbs (223 kg)
Rated power	85.8 kW (115 HP)				
Full throttle range	4,500 – 6,000 rpm				
Engine type	4 stroke DOHC in-line 4-cylinder				
Displacement	143.6 cu-in (2,354 cm^3)				
Spark plug gap	0.039 – 0.043 in (1.0 – 1.1 mm)				
Starter system	Electric starter				
Ignition system	Fully transistorized, battery ignition				
Lubrication system	Trochoid pump pressure lubrication				
Specified oil	Engine: API standard (SG, SH, SJ) SAE/FC-W 10W-30 Gear case: API standard (GL-4) SAE 90 Hypoid gear oil				
Oil capacity	Engine: 6.9 US qt (6.5 L) without oil filter change 7.1 US qt (6.7 L) with oil filter change Gear case: 1.04 US qt (0.98 L)				

CARB star label	ULTRA · LOW EMISSION
D.C. output	12 V – 40 A
Cooling system	Water cooling with thermostat
Exhaust system	Water exhaust
Spark plugs	ZFR6K-11 (NGK) KJ20DR-M11 (DENSO)
Fuel pump	Low pressure side: mechanical type High pressure side: electrical type
Fuel	Unleaded gasoline (86 pump octane or higher)
Gear change	Forward-Neutral-Reverse (dog type)
Steering angle	30° right and left
Tilt up angle (when transom angle at 12°)	Stageless (72°)
Trim angle (when transom angle at 12°)	– 4° to 16°

Tune Up

Spark plug gap	0.039 – 0.043 in (1.0 – 1.1 mm)	See page 77
Idle speed	750 ± 50 rpm	See shop manual
Valve clearance (cold)	Intake: 0.23 ± 0.02 mm Exhaust: 0.30 ± 0.02 mm	See shop manual
Other specifications	No other adjustment is needed	

* Without battery cable, with propeller

Honda outboard motors are power rated in accordance with NMMA procedures and using the ICOMIA standard 28/23.

Specifications

MODEL	BF135A				
Description code	BARJ				BASJ
Type	LA	LC	XA	XC	XCA
Overall length	33.3 in (845 mm)				
Overall width	22.8 in (580 mm)				
Overall height	65.6 in (1,665 mm)		70.5 in (1,790 mm)		
Transom height (when transom angle at 12°)	20.0 in (508 mm)		25.0 in (635 mm)		
Dry mass [weight]*	478 lbs (217 kg)		485 lbs (220 kg)		492 lbs (223 kg)
Rated power	100.7 kW (135 HP)				
Full throttle range	5,000 – 6,000 rpm				
Engine type	4 stroke DOHC in-line 4-cylinder				
Displacement	143.6 cu-in (2,354 cm^3)				
Spark plug gap	0.039 – 0.043 in (1.0 – 1.1 mm)				
Starter system	Electric starter				
Ignition system	Fully transistorized, battery ignition				
Lubrication system	Trochoid pump pressure lubrication				
Specified oil	Engine: API standard (SG, SH, SJ) SAE/FC-W 10W-30 Gear case: API standard (GL-4) SAE 90 Hypoid gear oil				
Oil capacity	Engine: 6.9 US qt (6.5 L) without oil filter change 7.1 US qt (6.7 L) with oil filter change Gear case: 1.04 US qt (0.98 L)				

CARB star label	ULTRA · LOW EMISSION
D.C. output	12 V – 40 A
Cooling system	Water cooling with thermostat
Exhaust system	Water exhaust
Spark plugs	ZFR6K-11 (NGK) KJ20DR-M11 (DENSO)
Fuel pump	Low pressure side: mechanical type High pressure side: electrical type
Fuel	Unleaded gasoline (86 pump octane or higher)
Gear change	Forward-Neutral-Reverse (dog type)
Steering angle	30° right and left
Tilt up angle (when transom angle at 12°)	Stageless (72°)
Trim angle (when transom angle at 12°)	– 4° to 16°

Tune Up

Spark plug gap	0.039 – 0.043 in (1.0 – 1.1 mm)	See page 77
Idle speed	750 ± 50 rpm	See shop manual
Valve clearance (cold)	Intake: 0.23 ± 0.02 mm Exhaust: 0.30 ± 0.02 mm	See shop manual
Other specifications	No other adjustment is needed	

* Without battery cable, with propeller

Honda outboard motors are power rated in accordance with NMMA procedures and using the ICOMIA standard 28/23.

Specifications

MODEL	BF150A					
Description code	BANJ				BAPJ	
Type	LA	LC	XA	XC	XCA	XCC
Overall length	33.3 in (845 mm)					
Overall width	22.8 in (580 mm)					
Overall height	65.6 in (1,665 mm)		70.5 in (1,790 mm)			
Transom height (when transom angle at 12°)	20.0 in (508 mm)		25.0 in (635 mm)			
Dry mass [weight]*	478 lbs (217 kg)		485 lbs (220 kg)		492 lbs (223 kg)	
Rated power	111.9 kW (150 HP)					
Full throttle range	5,000 – 6,000 rpm					
Engine type	4 stroke DOHC VTEC in-line 4-cylinder					
Displacement	143.6 cu-in (2,354 cm^3)					
Spark plug gap	0.039 – 0.043 in (1.0 – 1.1 mm)					
Starter system	Electric starter					
Ignition system	Fully transistorized, battery ignition					
Lubrication system	Trochoid pump pressure lubrication					
Specified oil	Engine: API standard (SG, SH, SJ) SAE/FC-W 10W-30 Gear case: API standard (GL-4) SAE 90 Hypoid gear oil					
Oil capacity	Engine: 6.9 US qt (6.5 L) without oil filter change 7.1 US qt (6.7 L) with oil filter change Gear case: 1.04 US qt (0.98 L)					

CARB star label	ULTRA · LOW EMISSION
D.C. output	12 V – 40 A
Cooling system	Water cooling with thermostat
Exhaust system	Water exhaust
Spark plugs	ZFR6K-11 (NGK) KJ20DR-M11 (DENSO)
Fuel pump	Low pressure side: mechanical type High pressure side: electrical type
Fuel	Unleaded gasoline (86 pump octane or higher)
Gear change	Forward-Neutral-Reverse (dog type)
Steering angle	30° right and left
Tilt up angle (when transom angle at 12°)	Stageless (72°)
Trim angle (when transom angle at 12°)	– 4° to 16°

Tune Up

Spark plug gap	0.039 – 0.043 in (1.0 – 1.1 mm)	See page 77
Idle speed	750 ± 50 rpm	See shop manual
Valve clearance (cold)	Intake: 0.23 ± 0.02 mm Exhaust: 0.30 ± 0.02 mm	See shop manual
Other specifications	No other adjustment is needed	

* Without battery cable, with propeller

Honda outboard motors are power rated in accordance with NMMA procedures and using the ICOMIA standard 28/23.

CONSUMER INFORMATION

Dealer Locator Information

To find an authorized Honda Servicing Dealer

For USA:
Visit our website:
http://marine.honda.com and click on Find a Dealer

For Canada:
Call 1-888-946-6329 or visit our website:
English
http://marine.honda.ca/dealerlocator
French
http://marine.honda.ca/trouver-concessionaire

Honda Publications

These publications will give you additional information for maintaining
and repairing your outboard motor.

Shop Manual

This manual covers complete maintenance and overhaul procedures. It is intended to be used by a skilled technician.

For USA:
Shop manuals are available through your Honda Marine dealer or visit http://marine.honda.com

For Canada:
Contact your dealer for information on the Shop Manual.

Parts Catalog

For USA:
This manual provides complete, illustrated parts lists.
The catalog is available through your Honda Marine dealer or visit http://marine.honda.com

For Canada:
Contact your dealer for information on Parts.

Accessory Catalog

Your authorized Honda Marine dealer offers a wide selection of accessories (optional equipment, oils, and lubricants) to enhance your boating experience.

For USA:
Visit http://marine.honda.com to see the entire catalog of accessories.

For Canada:
Check with your dealer or visit http://marine.honda.ca to view the range of accessories available.

Customer Service Information

Contacting Honda

Your Owner's Manual was written to cover most of the questions you might ask about your Honda. Any questions not answered in the Owner's Manual can be answered by your Honda dealer. If your dealer doesn't have an immediate answer, they should be able to get it for you.

If you have a difference of opinion with your dealer, please remember that each dealership is independently owned and operated. That's why it's important to work to resolve any differences at the dealership level. If the service personnel are unable to assist you, please discuss your concerns with the dealer management such as the Service Manager or the dealership's owner.
If you need to contact Honda regarding your experiences with your Honda product or with your dealer, please contact the Honda office in your region:

American Honda Motor Co., Inc.
Marine Division
Customer Relations Office
4900 Marconi Drive
Alpharetta, GA 30005-8847
Telephone: (770) 497 - 6400
M-F 8:30 am-7:00 pm (Eastern Time Zone)

Honda Canada Inc.
Customer Relations Office
180 Honda Boulevard
Markham, Ontario L6C 0H9
Tel: 1-888-946-6329 (Toll free)
Fax: 1-877-939-0909 (Toll free)

Please include the following information in your communication:

- Your name, address and telephone number (complete with area code)
- Model and complete serial number
- Date of purchase
- Name and location of selling dealer
- Name and location of servicing dealer (if different)
- A detailed description of your concerns

Warranty Coverage

Your new Honda is covered by the following warranties:

- Distributor's Limited Warranty
- Emission Control System Warranty

Please read the warranty statements contained in this manual. There are responsibilities, restrictions, and exclusions that apply to these warranties.

To obtain warranty service you must take your Honda outboard motor, together with proof of original retail purchase date, at your expense, to a Honda engine dealer or distributor authorized to sell that product in the United States, Puerto Rico, the U.S. Virgin Islands or Canada.

It is important to realize that your warranty applies to defects in material or workmanship of your Honda. Your warranty coverage does not apply to normal wear or deterioration associated with using your Honda outboard motor.

Your warranty coverage will not be voided if you choose to perform your own maintenance. However, you should have the proper tools and service information and be mechanically qualified. Failures that occur due to modifications, improper maintenance, or service are not covered.

Warranty Service

Please remember that recommended maintenance interval servicing is not included in your warranty coverage. Additionally, your warranty does not apply to the normal wear of items (such as spark plug(s), water pump, etc.).

As the owner of a Honda product, your servicing dealer may ask you to authorize an inspection. If the problem is covered under warranty, your dealer will perform any warranty repairs for you at no cost. However, you may be responsible for additional non-warranty charges.

If you have questions about warranty coverage or the nature of the repair, it is best to talk to the service manager of your Honda dealer.

Sometimes, in spite of the best intentions of all concerned, a misunderstanding may occur. If you aren't satisfied with your dealer's handling of the situation, we suggest you discuss your problem with the appropriate member of the dealership's management team. If the problem has already been reviewed with the appropriate manager of the Service, Parts, or Sales department, contact the owner of the dealership or their designated representative.

Warranty Statements

The American Honda Distributor's Limited Warranty applies to outboards purchased in the United States, Puerto Rico, or the U.S. Virgin Islands. The Honda Canada Distributor's Warranty applies to outboards purchased in Canada. The product warranty is only valid in the country where the product was purchased.

United States, Puerto Rico and U.S. Virgin Islands

Distributor's Limited Warranty

This warranty is limited to Honda Outboard Motors and related original equipment distributed by American Honda Motor Co., Inc., Power Equipment Division, 4900 Marconi Drive, Alpharetta, Georgia 30005-8847.

Products Covered by Warranty:	Length of Warranty: (from date of original retail purchase)		
	NON-COMMERCIAL/ NON-RENTAL	COMMERCIAL/RENTAL	STATE/LOCAL/FEDERAL GOVERNMENT
All models purchased on or after Jan. 1, 2016 (2)	60 months	24 months	36 months
All models purchased between July 1, 2008 and December 31, 2015 (2)	60 months	12 months	24 months
All models purchased on or before June 30, 2008 (1)(2)	36 months	12 months	24 months
Related original equipment items: BF5 through BF20 models: Portable fuel tank and original propeller. All models: Primer bulb/fuel line assembly and tiller handle.	The same duration as the outboard with which they were purchased.(3)		

(1) Models purchased prior to July 1, 2008 (unless previously purchased with True-5 warranty from a participating dealer).

(2) 40, 65, & 105 Jet models: Jet pump assembly is a dealer installed option. Jet pump warranty is provided by Specialty Manufacturing Co. (Outboard Jets).

(3) Portable fuel tanks: 24 months or the same duration as the outboard they were purchased with, whichever is longer.

To Qualify for This Warranty:
The Honda Outboard Motor must be purchased from American Honda or a dealer authorized by American Honda to sell Honda Outboard Motors in the United States, Puerto Rico, or the U.S. Virgin Islands. This limited warranty applies to the first retail purchaser and each subsequent owner during the applicable warranty time period.

What American Honda Will Repair or Replace Under Warranty:
American Honda will repair or replace, at its option, any part that is proven to be defective in material or workmanship under normal use during the applicable warranty time period. Warranty repairs and replacements will be made without charge for parts or labor. Anything replaced under warranty becomes the property of American Honda Motor Co., Inc.

All parts replaced under warranty will be considered as part of the original product and any warranty on those parts will expire coincidentally with the original product warranty.

To Obtain Warranty Service:

You must, at your expense, take your Honda Outboard Motor and proof of the original purchase date to any dealer who is authorized to service Honda Outboard Motors in the United States, Puerto Rico, or the U.S. Virgin Islands, during the dealer's normal business hours. If you are unable to obtain warranty service, or are dissatisfied with the warranty service you receive, take the following steps: First, contact the owner of the dealership involved; normally this should resolve the problem. However, if you should require further assistance, write or call the Honda Marine Customer Relations Department of American Honda Motor Co., Inc. Please see *Contacting Honda* on page 117.

Exclusions:
This warranty does not extend to the following:

- Conditions caused by lack of routine maintenance or improper storage (as outlined in the Owner's Manual)
- Conditions caused by the use of propeller (s) that do not allow the outboard motor to run in its recommended full throttle rpm range
- Operation inconsistent with the recommended operation/duty cycle (as outlined in the Owner's Manual)
- Parts affected or damaged by an abuse, submersion and/or collision
- Normal wear and tear
- Fuel contamination and water entering the engine through the fuel intake, air intake, or exhaust system
- Operation with fuels, oils, additives and lubricants which are not suitable for use in the product
- Use in an application for which the outboard motor was not designed, such as racing or competitive use or any other misuse or neglect
- Incorporation of unsuitable attachments or parts
- The unauthorized alteration, improper installation and/or rigging, or any causes other than defects in material or workmanship
- Corrosion to steering system or electrical components, corrosion due to electrolysis, water born foreign chemicals, improper service or corrosion caused by damage or abuse
- Reimbursement for towing charges, in and out of water charges, or technician travel time
- Growth of marine organisms on motor surfaces, external or internal
- Any product that has ever been declared a total loss or sold for salvage by a financial institution or insurer, or that has been issued a ''salvage'' or similar title under any state's law.

Disclaimer of consequential damage and limitation of implied warranties:
American Honda disclaims any responsibility for loss of time or use of the outboard, revenue, or the equipment in which the outboard is installed, transportation, commercial loss, or any other incidental or consequential damage. Any implied warranties are limited to the duration of this written limited warranty.
Some states do not allow limitations on how long an implied warranty lasts and/or do not allow the exclusion or limitation of incidental or consequential damages, so the above exclusions and limitations may not apply to you. This warranty gives you specific legal rights, and you may also have other rights which vary from state to state.

Accessories and Replacement Parts

This warranty is limited to Honda Marine parts, accessories and apparel when distributed by American Honda Motor Co., Inc., 1919 Torrance Blvd., Torrance, California 90501-2746.

Products Covered by Warranty:	Length of Warranty: (from date of original retail purchase)		
	NON-COMMERCIAL	COMMERCIAL/RENTAL	STATE/LOCAL/FEDERAL GOVERNMENT
Accessories other than noted below	12 months	3 months	3 months
Emission related accessories: Portable fuel tanks, fuel line assemblies, and water/fuel separators	24 months	24 months	24 months
Replacement Parts	6 months	3 months	3 months

To Qualify for This Warranty:

1. The accessories or replacement parts must be purchased from American Honda or a dealer, distributor, or distributor's dealer authorized by American Honda to sell those products in the United States, Puerto Rico, and the U.S. Virgin Islands. Parts and Accessories must be purchased for installation on original Honda equipment or engines to be eligible for warranty coverage. Installing parts and accessories on non-Honda products or engines voids this warranty.
2. You must be the first retail purchaser. This warranty is not transferable to subsequent owners.

What American Honda Will Repair or Replace Under Warranty:

American Honda will repair or replace, at its option, any marine product accessories or replacement parts that are proven to be defective in material or workmanship under normal use during the applicable warranty time period. Anything replaced under warranty becomes the property of American Honda Motor Co., Inc. All parts replaced under warranty will be considered as part of the original product and any warranty on those parts will expire coincidentally with the original product warranty.

Accessories and replacement parts, installed by a dealer who is authorized by American Honda to sell them, will be repaired or replaced under warranty without charge for parts or labor. If installed by anyone else, accessories and replacement parts will be repaired or replaced under warranty without charge for parts, but any labor charges will be the responsibility of the purchaser.

To Obtain Warranty Service:
You must, at your expense, take the Honda Outboard Motor product accessory or replacement part or the outboard motor or boat on which the accessory or replacement part is installed, and proof of purchase to any Honda Marine authorized service facility or dealer in the United States, Puerto Rico, or the U.S. Virgin Islands, during normal business hours.

Exclusions:
This warranty does not extend to accessories or parts affected or damaged by collision, normal wear, use in an application for which the product was not designed or any other misuse, neglect, incorporation or use of unsuitable attachments or parts, unauthorized alteration, improper installation, or any causes other than defects in material or workmanship of the product.
Installing parts and accessories on non-Honda products or engines voids this warranty.

Disclaimer of consequential damage and limitation of implied warranties:
American Honda disclaims any responsibility for loss of time or use of the outboard motor, or the boat on which the product is installed, transportation, commercial loss, or any other incidental or consequential damage. Any implied warranties are limited to the duration of this written warranty. Some states do not allow limitations on how long an implied warranty lasts and/or do not allow the exclusion or limitation of incidental or consequential damages, so the above exclusions and limitations may not apply to you. This warranty gives you specific legal rights, and you may also have other rights, which vary from state to state.

Emission Control System Warranty

Your new Honda outboard engine complies with both the U.S. EPA and State of California emission regulations. American Honda provides the same emission warranty coverage for outboard engines sold in all 50 states. In all areas of the United States your outboard engine must be designed, built, and equipped to meet the U.S. EPA and California Air Resources Board emission standard for spark ignited marine engines.

CALIFORNIA EMISSION CONTROL WARRANTY STATEMENT YOUR WARRANTY RIGHTS AND OBLIGATIONS

The California Air Resources Board (CARB) and American Honda Motor Co., Inc. are pleased to explain the emission control system warranty on your 2017 Honda outboard engine. In California, new outboard engines must be designed, built, and equipped to meet the state's stringent anti-smog standards.

American Honda Motor Co., Inc. must warrant the emission control system on your outboard engine for the periods of time listed below provided there has been no abuse, neglect, or improper maintenance of your outboard engine.

Your emission control system may include parts such as the carburetor or fuel injection system, the ignition system, and catalytic converter. Also included may be hoses, belts, connectors, and other emission-related assemblies.

Where a warrantable condition exists, American Honda Motor Co., Inc. will repair your outboard engine at no cost to you including diagnosis, parts, and labor.

MANUFACTURER'S WARRANTY COVERAGE:

Select emission control parts from model year 2010 and later outboard engines are warranted for five years or 250 hours of use, whichever first occurs; or the length of the Honda Marine Distributor's Limited Warranty, whichever is longer. However, warranty coverage based on the hourly period is only permitted for engines equipped with hour meters as defined in § 2441 (a)(13)* or their equivalent. If any emission-related part on your engine is defective under warranty, the part will be repaired or replaced by American Honda Motor Co., Inc.

* California Code of Regulations.

OWNER'S WARRANTY RESPONSIBILITIES:

As the outboard engine owner, you are responsible for the performance of the required maintenance listed in your owner's manual. American Honda Motor Co., Inc. recommends that you retain all receipts covering maintenance on your outboard engine, but American Honda Motor Co., Inc. cannot deny warranty solely for the lack of receipts or your failure to ensure the performance of all scheduled maintenance.

As the outboard engine owner, you should, however, be aware that American Honda Motor Co., Inc. may deny you warranty coverage if your outboard engine or a part has failed due to abuse, neglect, improper maintenance, or unapproved modifications.

You are responsible for presenting your outboard engine to a Honda Marine dealer as soon as a problem exists. The warranty repairs will be completed in a reasonable amount of time, not to exceed 30 days.

If you have any questions regarding your warranty rights and responsibilities, you should contact American Honda Motor Co., Inc., Marine Division Customer Relations Office. Please see *Contacting Honda* on page 117.

WARRANTY COVERAGE:

Honda outboard engines certified to the CARB and EPA 2010 and later regulation are covered by this warranty to be free from defects for a minimum of five years or 250 hours of operation, whichever comes first; or the length of the Honda Marine Distributor's Limited Warranty, whichever is longer, from the date of delivery to the retail purchaser. This warranty is transferred to each subsequent purchaser for the duration of the warranty period. Warranty repairs will be made without charge for diagnosis, parts, and labor. All defective parts replaced under this warranty become the property of American Honda Motor Co., Inc. A list of warranty parts is on page 127. Normal maintenance items, such as spark plugs and filters, that are on the warranted parts list are warranted up to their required replacement interval only.

American Honda Motor Co., Inc. is also liable for damages to other engine components caused by a failure of any warranted part during the warranty period.

Only Honda approved replacement parts will be used in the performance of any warranty repairs, and they will be provided without charge to the owner. You may use any replacement part as defined in § 1900 (b)(20)* in the performance of any maintenance or repairs. If a replacement part is used in the repair or maintenance of your engine, and an authorized Honda Marine dealer determines it causes the failure of a warranted part, your warranty claim may be denied. If the part in question is not related to the reason that your engine requires repair, your claim will not be denied.

* California Code of Regulations.

TO OBTAIN WARRANTY SERVICE:

You must take your Honda outboard engine, along with your sales registration card or other proof of original purchase date, at your expense, to any Honda Marine dealer that is authorized by American Honda Motor Co., Inc. to sell and service that Honda Marine product during its normal business hours. Claims for repair or adjustment found to be caused solely by defects in material or workmanship will not be denied because the engine was not properly maintained and used.

If you are unable to obtain warranty service, or are dissatisfied with the warranty service you received, contact the owner of the dealership involved. Normally this should resolve your problem. However, if you require further assistance, write or call the Honda Marine Customer Relations Office of American Honda Motor Co., Inc.

EXCLUSIONS:

Failures other than those resulting from defects in material or workmanship are not covered by this warranty. This warranty does not extend to emission control systems or parts which are affected or damaged by owner abuse, neglect, improper maintenance, misuse, misfueling, improper storage, and/or collision, the incorporation of, or use of, unsuitable attachments, or the unauthorized alteration of any part.

This warranty does not cover replacement of expendable maintenance items made in connection with required maintenance service after the items first scheduled replacement as listed in the maintenance section of the product owner's manual, such as: spark plugs and filters.

DISCLAIMER OF CONSEQUENTIAL DAMAGE AND LIMITATION OF IMPLIED WARRANTIES:

American Honda Motor Co., Inc. disclaims any responsibility for incidental or consequential damages such as loss of time or the use of outboard engine, or any commercial loss due to the failure of the equipment; and any implied warranties are limited to the duration of this written warranty. This warranty is applicable only where the California or U.S. EPA emission control system warranty regulation is in effect.

EMISSION CONTROL SYSTEM WARRANTY PARTS:

SYSTEMS COVERED BY THIS WARRANTY:	PARTS DESCRIPTION:
Fuel Metering	Carburetor assembly, Throttle body, Fuel injector, Fuel pump, Fuel pressure regulator, Throttle position sensor, Intake air temperature sensor, Engine temperature sensor, Manifold absolute pressure sensor, Idle air control valve, Barometric pressure sensor, Fuel line solenoid valve, Intake manifold, Intake valves, and Oxygen sensor or Air fuel ratio sensor
Evaporative	Portable fuel tank, Fuel cap, Fuel hoses, Primer bulb, Fuel hose joint
Air Induction	Air intake duct, Vapor separator, Intake manifold tuning valve (Intake air bypass control valve)
Ignition	Flywheel magneto, Ignition pulse generator, Ignition coil assembly, Ignition control module, Engine control module, Crankshaft position sensor, Spark plug cap, Spark plug*, Knock sensor, and Camshaft position sensor
Lubrication System	Oil pump and internal parts
Crankcase Emission Control	Crankcase breather tube, Positive crankcase ventilation valve, Oil filler cap
Exhaust	Exhaust manifold and Exhaust valves
Valve Control System	Rocker arm oil control valve
Miscellaneous Parts	Tubing, fittings, seals, gaskets, and clamps associated with these listed systems.
* Covered up to the first required replacement only. See the *Maintenance Schedule* on page 64 and 65.	

Canada

Distributor's Warranty

HONDA CANADA INC., for and on behalf of Honda Motor Co. Ltd., Tokyo, Japan, gives the following written warranty on each new marine product manufactured by Honda Motor Co. Ltd., Japan, distributed in Canada by Honda Canada Inc. and sold by authorized Honda Marine dealers.

Whenever used herein, the word ''Honda'' refers to Honda Canada Inc. and/or Honda Motor Co. Ltd., as appropriate from the context.

HONDA WARRANTS THAT each new Honda Marine product will be free, under normal use and maintenance, from any defects in material or workmanship for the relevant warranty period set forth below. If any defects should be found in a Honda Marine product within the relevant warranty period, necessary repairs and replacements with a new part or the Honda equivalent shall be made at no cost to the consumer for parts and labour, when Honda acknowledges that such defects are attributable to faulty material or workmanship at the time of manufacture.

WARRANTY PERIOD RETAILED ON OR AFTER APRIL 1, 2005:

	Non-commercial use	Commercial use
All Honda Outboard Models	36 Months	12 Months

THIS WARRANTY COVERS

a) Any Honda Marine product purchased in Canada from an authorized Honda dealer which has been registered at the time of purchase on a form provided by Honda, which has had set-up and pre-delivery service performed by an authorized Honda dealer and which is normally operated in Canada;
b) Any factory installed part (except normal maintenance parts referred to in ''THIS WARRANTY DOES NOT COVER''); and
c) Any marine product on which required maintenance services have been performed as prescribed in the Owner's Manual.

THIS WARRANTY DOES NOT COVER

a) Any repairs required as a result of collision, accident, striking any object, misuse or lack of required maintenance;
b) Any repairs required as a result of any attachments, parts or devices installed by or repairs done by a party other than an authorized Honda dealer;
c) Any outboard that has been operated out of water, (Run Dry) damaging the water pump and or engine components due to insufficient cooling water.
d) Any marine products modified, altered, disassembled or remodelled;
e) Normal maintenance services, including tightening of nuts, bolts and fittings and engine tune-up and the replacement of parts made in connection with normal maintenance services including filters, spark plugs and wires, fuses, belts, lubricants and other expendables susceptible to natural wear;
f) Outboard propeller or shear pin.
g) All accessories or attachments.

THE OWNER'S OBLIGATION

In order to maintain the validity of this DISTRIBUTORS WARRANTY, the required maintenance services as set forth in the Owner's Manual must be performed at the proper intervals and detailed receipts and records retained as proof.

TO OBTAIN WARRANTY SERVICE

You must take your Honda Marine product, at your expense, during normal service hours, to any authorized Honda Marine dealership. If you are unable to obtain or are dissatisfied with the warranty service you receive, first contact the owner of the dealership involved; this should resolve the problem. If you require further assistance, contact Honda Canada's Customer Relations Department at:

HONDA CANADA INC.
Customer Relations Office
180 Honda Boulevard
Markham, Ontario L6C 0H9

TELEPHONE: 1-888-946-6329 TOLL FREE
FAX : 1-877-939-0909 TOLL FREE

REPLACEMENT PARTS AND ACCESSORY WARRANTY

New genuine Honda replacement parts or accessories sold to a consumer or installed by an authorized Honda Marine dealer which are not covered by the DISTRIBUTORS WARRANTY are warranted for a period of one year from date of purchase, provided, however, that this Replacement Parts and Accessory Warranty does not apply to any replacement parts modified, used with, or installed on a marine product for which the replacement parts were not intended. Electrical components that are not installed by the dealer (sold over the counter) are not covered by warranty.

ENTIRE WRITTEN WARRANTY

This DISTRIBUTORS WARRANTY and the REPLACEMENT PARTS AND ACCESSORY WARRANTY are the only and the entire written warranties given by Honda for Marine engines. No dealer or his agent or employee is authorized to extend or enlarge on these warranties on behalf of Honda by any written or verbal statement or advertisement.

DISCLAIMER

To the extent the law permits, Honda disclaims any responsibility for loss of time or use of the product, transportation or towing costs or any other indirect, incidental or consequential damage, inconvenience or commercial loss.

NOTICE TO CONSUMER

The provisions contained in these written warranties are not intended to limit, modify, take away from, disclaim or exclude any warranties set forth in or the operation of The Consumer Products Warranties Act, 1977 (Saskatchewan), The Consumer Product Warranty and Liability Act (New Brunswick), The Consumer Protection Act (Quebec), or any other similar provincial or federal legislation.

INDEX

Alternator (ACG) Indicator 35
Anodes 38
  Replacement 85
ARE YOU READY TO GET UNDERWAY? 39

Battery 108
  Will Not Charge 100
BEFORE OPERATION 39
BREAK-IN PROCEDURE 41

CLEANING AND FLUSHING 87
Common Controls 28
COMPONENT AND CONTROL LOCATIONS 13
CONSUMER INFORMATION 116
CONTROL AND FEATURE IDENTIFICATION CODES 11
CONTROLS 17
CONTROLS AND FEATURES 11
Cooling System Indicator 37
CRUISING 55
Customer Service Information 117

Dealer Locator Information 116
Distributor's Limited Warranty 119
Distributor's Warranty 128

Electric Starter Will Not Operate 95, 100
Emergency Stop Switch Clip and Emergency Stop Switch
  Panel-Mount Type 21
  Side-Mount Type 17
  Top-Mount Type 24
Emission Control System Information 108
Emission Control System Warranty 124
Engine
  Cover
    Latch 30
    REMOVAL AND INSTALLATION 67
  Oil
    Change 69
    Filter Change 71
    Level Check 68
    Recommendations 72
  OVERHEATS 99
  WILL NOT START 96

Fast Idle Button
Panel-Mount Type 23
Top-Mount Type 27
Fast Idle Lever 19
Fuel
PRIMING 42
Priming Bulb 38
Fuel
RECOMMENDATIONS 79
Filter Inspection and Replacement 80
Fuse Replacement 100
FUSES 100

Gearshift/Throttle Control Lever
Panel-Mount Type 22
Side-Mount Type 18
Top-Mount Type 25
GEARSHIFT AND THROTTLE OPERATION 53

HARD STARTING OR STALLS AFTER STARTING 98
HOISTING THE OUTBOARD MOTOR 92
Honda Publications 116
HOW TO DETERMINE WHICH DIRECTION THE PROPELLER SHAFT ROTATES 12

Ignition Switch
Panel-Mount Type 20
Side-Mount Type 17
Top-Mount Type 24
IMPORTANT SAFETY INFORMATION 7
INDICATORS 35
INFREQUENT OR OCCASIONAL USE 42
INSTRUMENTS 31
IS YOUR OUTBOARD MOTOR READY TO GO? 39

Lubrication Points 73

MAINTENANCE SAFETY 62
MAINTENANCE SCHEDULE 64
Malfunction Indicator 35
MANUAL RELIEF VALVE 29, 67
MOORING, BEACHING, LAUNCHING 59
MULTIPLE OUTBOARD MOTORS 60

NMEA 2000® Interface Coupler 32

Oil Pressure Indicator 36
OIL PRESSURE INDICATOR GOES OFF AND ENGINE SPEED IS LIMITED 102
Operating Hour Notification System 32
OPERATION 41
OTHER FEATURES 37
OUTBOARD MOTOR SAFETY 7
Overheat Indicator 36
OVERHEAT INDICATOR COMES ON AND ENGINE SPEED IS LIMITED 103

Power Tilt Switch 29
Power Trim/Tilt Switch 28
Propeller Replacement 85

REFUELING 78
REMOVAL FROM STORAGE 93
Rev Limiter 38

SAFE OPERATING PRECAUTIONS 41
SAFETY LABEL LOCATION 9
Serial Number Locations 107
SERVICING YOUR OUTBOARD MOTOR 61
SHALLOW WATER OPERATION 58
SPARE EMERGENCY STOP SWITCH CLIP (optional equipment) 63
Spark Plug Service 75
Specifications 113
Star Label 111
STARTING THE ENGINE 43
- Panel-Mount Type 46
- Side-Mount Type 43
- Top-Mount Type 48

STEERING 54
STOPPING THE ENGINE 51
- Emergency Engine Stopping 51
- Normal Engine Stopping 52

STORAGE 89
- Engine oil 91
- Fuel 89

STORAGE PRECAUTIONS 92
SUBMERGED OUTBOARD MOTOR 105

Tachometer (optional equipment) 31
TAKING CARE OF UNEXPECTED PROBLEMS 95
TECHNICAL INFORMATION 107
THE IMPORTANCE OF MAINTENANCE 61
Tilt Lock Lever 29
TOOL KIT and OWNER'S MANUAL 63
TRANSPORTING 94
  WITH OUTBOARD MOTOR INSTALLED ON BOAT 94
  WITH OUTBOARD MOTOR REMOVED FROM BOAT 94
Trim Meter (optional equipment) 31
Trim Tab 31
TRIM TAB ADJUSTMENT 66
TRL (Trolling) Control Switch 30
Trolling Speed Control 57

Warranty Statements 119
Water Separator Buzzer 37
WATER SEPARATOR BUZZER SOUNDS 105
Water Separator Inspection and Service 83

MEMO

MEMO

HONDA

The Power of Dreams

31ZX1621
00X31-ZX1-6210

EM3

AH 英 AB FM 250.2016.09
Printed in Japan